Jewelry Cabinet • Coffee Table • Bird Feeder • Plate Shelf • Cabriole Legs

Woodsmith®

Vol. 18 / No. 106

WhereWeShare.com

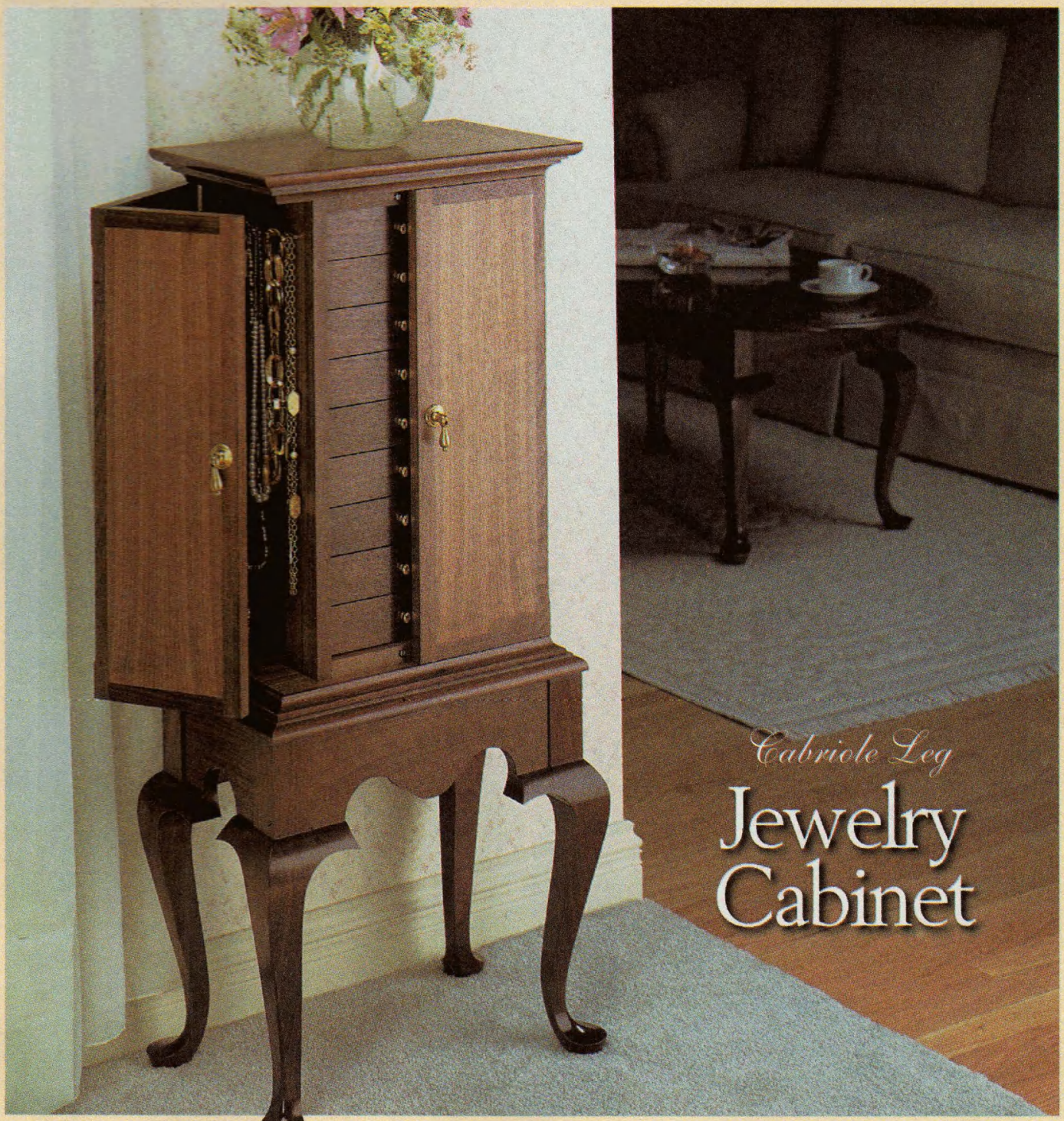

Cabriole Leg

Jewelry Cabinet

Woodsmith

No. 106 August, 1996

Publisher Donald B. Peschke
Editor Terry J. Strohman
Associate Editor Jon Garbison
Assistant Editor Vincent Ancona
Art Director Todd Lambirth
Senior Illustrators David Kreyling, Dirk Ver Steeg
Graphic Designer Mike Mittermeier

CREATIVE RESOURCES

Creative Director: Ted Kralicek • *Project Developer:* Ken Munkel • *Project Designer:* Ted Wong, Jr. • *Shop Manager:* Steve Curtis • *Shop Craftsman:* Steve Johnson • *Photography Director:* Lark Gilmer • *Senior Photographer:* Crayola England

BOOKS

Executive Editor: Douglas L. Hicks • *Senior Graphic Designer:* Chris Glowacki

CIRCULATION

Circulation Director: Susan Du Bois • *Subscription Manager:* Sandy Baum • *Renewal Manager:* Paige Rogers • *Assistant Direct Mail Mgr.:* Julie Greenlee • *Assistant Subscription Mgr.:* Joy Krause • *Associate Graphic Design Director:* Susie Rider • *Sr. Graphic Designer:* Cheryl L. Simpson

CORPORATE SERVICES

Vice President of Planning and Finance: Jon Macarthy • *Controller:* Robin Hutchinson • *Sr. Account.:* Laura Thomas • *Production Dir.:* George Chmielarz • *Electronic Publishing:* Douglas M. Lidster • *Production Artist:* Jon Snyder • *Production Manager:* Carol Quijano • *Electronic Comunications. Coord.:* Gordon C. Gaippe • *Network Administator:* Al Barnes • *Prof. Development Dir.:* Joyce Moore • *Admin. Assistant:* Julia Fish • *Receptionists:* Jeanne Johnson, Sheryl Ribbey • *Building Maint.:* Ken Griffith

WOODSMITH MAIL ORDER

Operations Director: Bob Baker • *Art Dir.:* Cindy Scarpino • *Materials Manager:* Mark Mattiussi • *Customer Service Mgr.:* Jennie Enos • *Nat. Sales Manager:* Kent A. Buckton • *Warehouse Supr.:* Nancy Johnson • *Buyer:* Linda Jones • *Systems Operator:* Tammy Aldini • *Team Leader:* Karla Eslinger • *Tech. Support:* Dave Stone • *Cust. Serv. Reps.:* Jennifer Murphy, Anna Cox, Kristi Andrews, Margo Petrus • *Warehouse:* Chuck Carlson, Sylvia Carey, Larry Prine, Scott Gilliam, Cathy Steiner

WOODSMITH STORE

Manager: Dave Larson • *Assistant Manager:* Paul Schneider • *Sales Staff:* Pat Lowry, Jerome Herr • *Office Manager:* Vicki Edwards

Woodsmith® (ISSN 0164-4114) is published bimonthly (Feb., Apr., June, Aug., Oct., Dec.) by August Home Publishing Company, 2200 Grand, Des Moines, IA 50312.

Woodsmith® is a registered trademark of August Home Publishing.
Copyright© 1996 August Home Publishing Company. All rights reserved.

Subscriptions: Single copy: $4.99. One year subscription (6 issues), $19.95. Two years (12 issues), $35.95. (Canada/Foreign add $5 per year, U.S. funds.)
Periodicals Postage Paid at Des Moines, IA and at additional offices.
Postmaster: Send change of address to *Woodsmith*, Box 37112, Boone, IA 50037-2112.
Subscription Questions? Write to *Woodsmith*, P.O. Box 842, Des Moines IA 50304-9961 or call 1-800-333-5075, 8:00 am to 5:00 pm, Central Time, weekdays.
E-Mail: augusthome@aol.com
World Wide Web: http://www.augusthome.com

Printed in U.S.A.

EDITOR'S COLUMN

SAWDUST

Graceful. That's the first word that comes to mind whenever I see a piece of Queen Anne furniture. Not only that, I've always been impressed by the craftsmanship that went into building and shaping it.

That's why I've especially enjoyed working on two of the projects featured in this issue. Both the jewelry cabinet (shown on page 6) and the coffee table (page 20) incorporate several elements of traditional Queen Anne design: delicate moldings, scalloped cutouts, and gently curved shapes — the most striking of which are the graceful S-shaped legs.

CABRIOLE LEGS. This style of leg is called "cabriole" (CAB ree ol). The cabriole leg is one of the hallmarks of Queen Anne furniture. But its origins can be traced back to the time of the pharaohs, when craftsman would carve animal-like shapes into their designs.

Then, just before the turn of the 18th century, French woodworkers revived the idea of using stylized animal legs for furniture. Their versions were typically very intricate and included ornate carvings.

Next the English picked up on the idea and began incorporating a simplified version into their furniture. But it was American craftsman that really defined the look of the cabriole leg. They created simple, elegant designs that formed the foundation for Queen Anne style furniture.

HEIRLOOM PROJECTS. So when it came time to design the Queen Anne style projects in this issue, we started with the legs. Then we designed the rest of the project around them.

To keep things from getting too complicated, we used the same basic cabriole leg for both the jewelry cabinet and the coffee table. And we chose a very simple style of leg that doesn't involve any carving. Instead, you just cut the basic shape out on a band saw and then finish shaping the leg with a rasp, file, and some sandpaper.

OTHER PROJECTS. Of course, if Queen Anne furniture doesn't interest you, you're not out of luck. We have two other great projects in this issue. There's a striking copper-roofed bird feeder shown on page 24 and a traditional oak plate shelf on page 32.

NEW FACES. We've added three new faces since last issue. First, Lark Gilmer has joined us as Photography Director. Second, Ted Wong, Jr. will be helping out as Project Designer. And finally, Vince Ancona has joined the staff as Assistant Editor.

JOB OPENINGS. August Home Publishing is continuing to grow. And we're looking to fill several editorial positions on a new magazine.

Ideal candidates should have previous publishing experience. And all applicants must have excellent writing skills and experience in home improvement and woodworking. If you'd like to apply, please send your letter and resume to: J.W. Moore, August Home Publishing, 2200 Grand Ave., Des Moines, IA 50312.

Terry

A LOOK INSIDE

CONTENTS

Features

Jewelry Cabinet 6

This classic Queen Anne-style cabinet features graceful cabriole legs and L-shaped doors. Inside, there are nine small pull-out drawers that provide plenty of storage space.

Cabriole Legs 14

These beautiful, sculpted legs are built using common woodworking tools and techniques. The design is basic, and the procedure is covered with simple, step-by-step instructions.

Coffee Table 20

The classic Queen Anne design of this coffee table combines an oval top, scalloped aprons, and cabriole legs.

Bird Feeder 24

This feeder has several unique features, including shingled walls and a copper roof. But don't let any of that fool you — there's nothing tricky about building this project.

Staining End Grain 30

When staining a project, any exposed end grain usually darkens significantly. Here are three solutions for getting an even color.

Plate Shelf 32

We borrowed many of the design elements for this plate shelf from architecture: dentil molding, built-up crown molding, and a rail made with factory-made spindles.

Departments

Tips & Techniques 4
Shop Notes 18
Talking Shop 29
Reader's Jig 34
Sources 35

Jewelry Cabinet *page 6*

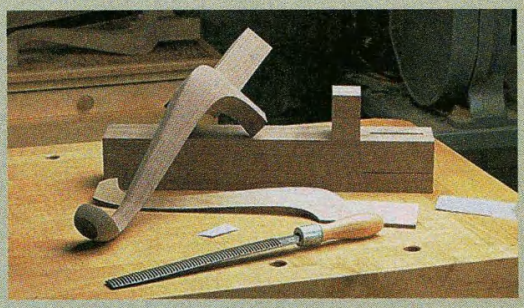

Cabriole Legs *page 14*

Bird Feeder *page 24*

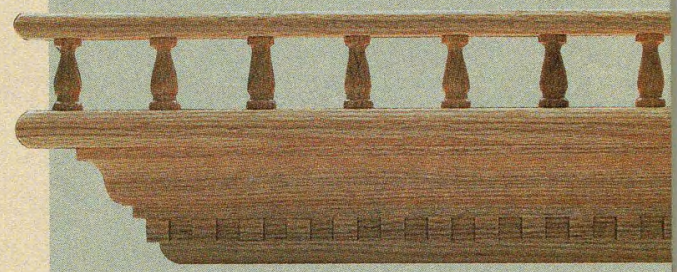

Plate Shelf *page 32*

TIPS & TECHNIQUES

Drilling Jig

When installing shelf pins in a cabinet, it's important to keep the holes aligned. But even when I lay out the holes correctly, the drill bit will sometimes slip while drilling them.

To overcome this problem, I made a jig that guides my drill bit and spaces the holes at the same time.

The jig is just a piece of hardboard or thin plywood attached to a cleat made from a scrap piece of wood. Centered between the inside edge of the cleat and the end of the hardboard is a row of evenly spaced 1/4"-dia. holes, see Fig. 1.

To use the jig, position the cleat against the edge of the cabinet and drill your first hole. Insert a dowel into the hole to hold the jig in place and drill the rest of the holes, moving the jig and dowel from hole to hole as often as needed.

To drill holes at the rear of a cabinet after the back is installed, just flip the jig over, see Fig. 2.

Charles Shere
Berkeley, California

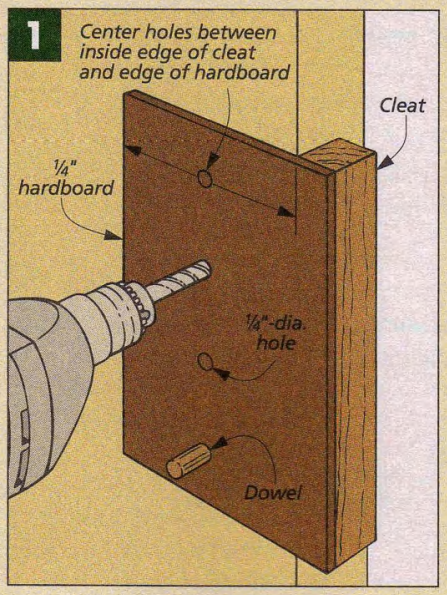

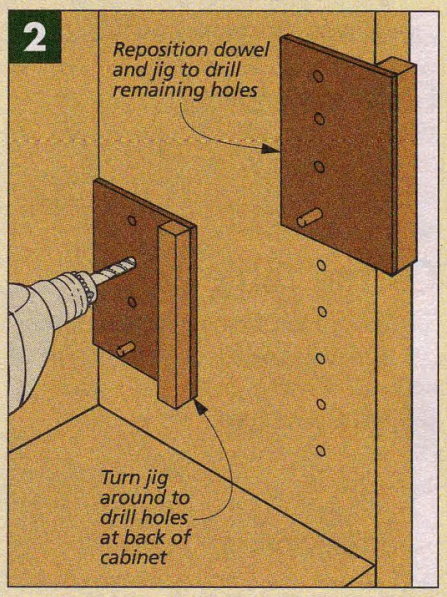

Quick Drawer Slides

If you have an older drawer that binds on its wooden drawer slides, try using metal thumb tacks for inexpensive drawer glides, see drawing below.

Just place them on the load bearing surfaces in the cabinet, see detail 'a'. I use two on the cabinet front rail and two on the drawer bottom at the back.

Mark Cordes
Shoreview, Minnesota

Stopping Insert Rattle

The metal insert on my table saw used to rattle whenever the saw was running. To eliminate this, I simply put a small, (chocolate-chip size) drop of silicone on each of the cast iron "ears" down in the recessed opening, see drawing and detail below. The silicone cushions the insert and quiets the rattle.

Larry Heinonen
Union City, Michigan

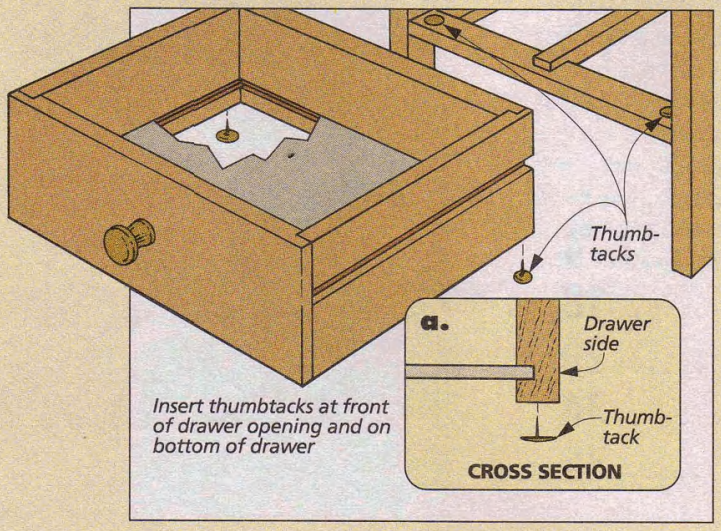

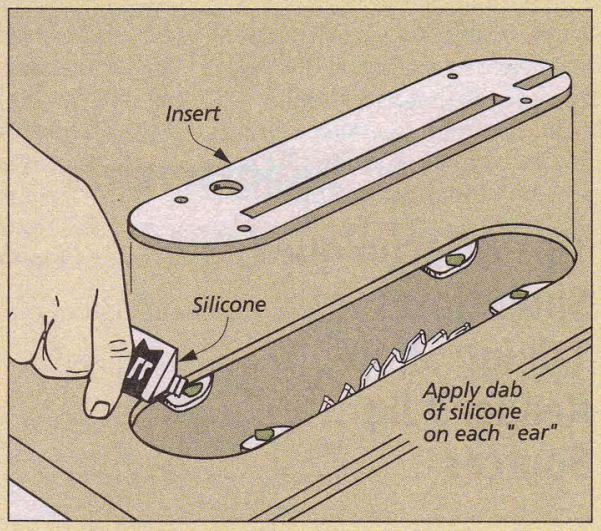

Outfeed Roller

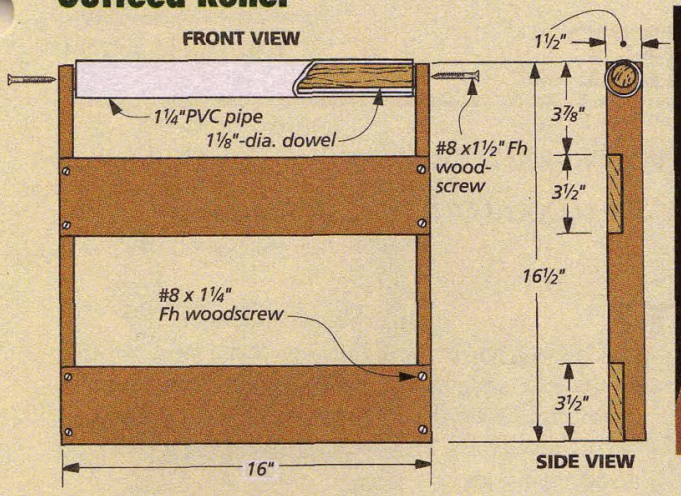

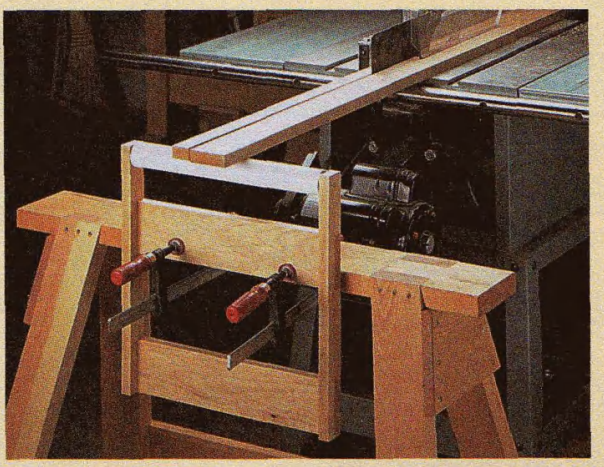

I built my own outfeed roller from a piece of PVC pipe and a dowel, see photo.

Start by cutting the dowel slightly longer than the pipe, see drawing.

Then make a support frame out of some scraps of wood, see drawing.

Now place the pipe over the dowel and with both pieces positioned between the support frame, drive a screw into each end.

Finally, clamp the support to a sawhorse so the top of the roller is aligned with the table on your saw.

William McMullen
Milford, Connecticut

Drill Press Fence

Drilling long pieces of stock on a drill press can be a challenge. To make the job go easier, I made an extra long fence from a 4' long piece of angle iron.

A couple of pieces of wood are bolted to the bottom of the fence to support the workpiece. Then just bolt the fence to the slots in the table.

John Walker
Xenia, Ohio

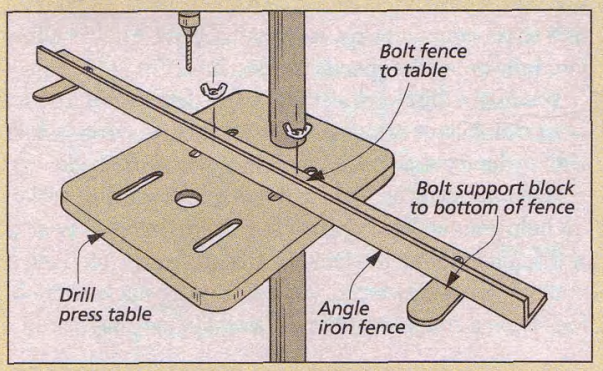

SUBMIT YOUR TIPS

If you would like to share an *original* shop-tested tip, send it to: *Woodsmith*, Tips and Techniques, 2200 Grand Avenue, Des Moines, Iowa 50312. Or if it's easier, FAX it to us at: 515-282-6741. Or use our E-Mail: 75330.2301@compuserve.com.

If published, you'll receive $30 to $150, depending on the published length. Include a brief explanation and sketch or photo. And don't worry, we'll rewrite the tip and redraw the art, if necessary. Also, *please* include a daytime phone number.

Quick Tips

FORMICA SANDING BLOCK

Sanding the curve of an arc with a flat sanding block is difficult. But a piece of plastic laminate with self-adhesive sandpaper on one side will flex to follow most curves. And it's stiff enough to sand down high spots.

Jason Carmichael
Half Moon Bay, California

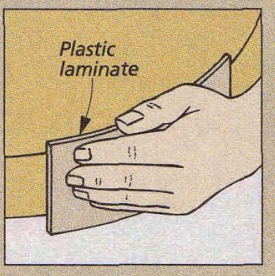

SANDING DISK

Pressure sensitive adhesive (PSA) sanding disks work great, but the adhesive tends to dry out when it's exposed to the air. But if you just hold the pad over a light bulb for a minute or so, the heat from the bulb will reactivate the adhesive.

Rich Wichels
Lynnwood, Washington

CUSHIONED BAR CLAMP

For a clamp pad that doesn't constantly fall off the clamp, try using a piece of plastic tubing. It's inexpensive and available at most hardware stores. Just cut off a 1"-long piece and make a slit in one wall like a button hole. Then slip the tubing over the clamp jaw.

Reed Done
Mesa, Arizona

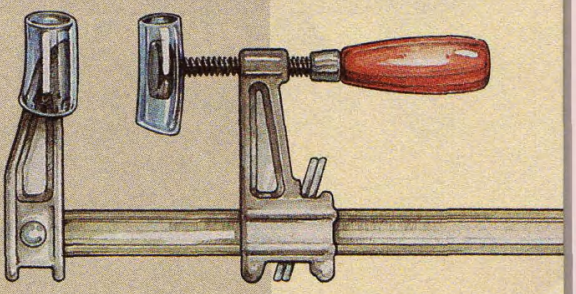

JEWELRY CABINET

Cabriole legs and a slender design give this jewelry cabinet a classic look. But beneath the fancy exterior are basic woodworking techniques.

Years ago, jewelry was often one of the most valuable things a family owned. So it was only natural to store these precious items in a special case or box — something out of the ordinary. That's what we had in mind when we designed this jewelry cabinet.

We started by designing cabriole legs and gracefully curved aprons to give the base of the jewelry cabinet an elegant look. Then at the top and bottom of the case we included built-up moldings. But I think the most interesting feature of this project is the doors.

DOORS. The doors are unlike any I've ever seen on a jewelry cabinet. They're L-shaped, so they wrap around the front and sides of the case. And since they're attached at the back of the case, you don't see any hinges.

These doors look as beautiful when they're open as when they're closed. They fold out like wings on each side of the case, revealing storage areas for necklaces and a stacked set of shallow drawers.

DRAWERS. The drawers themselves also have some neat features. They can be removed from the case so you can find small items quickly, see photo below. And we show you how to build a special padded insert to hold rings.

You might think that all these extra details require a lot of special skills or equipment. But this entire project is built with ordinary woodworking construction methods.

Even the cabriole legs are straightforward to make. To help you out, we're providing a separate step-by-step article on building the legs. (It starts on page 14.) And if you're still not convinced, you can buy pre-made cabriole legs from a couple of different sources (see page 35).

► *Padded drawer inserts safely hold rings or earrings. And brass drawer pulls and specially-designed brass necklace pegs give the jewelry cabinet an elegant look.*

Construction Details

OVERALL DIMENSIONS:
18" W x 12" D x 40⅜" H

CROSS SECTION

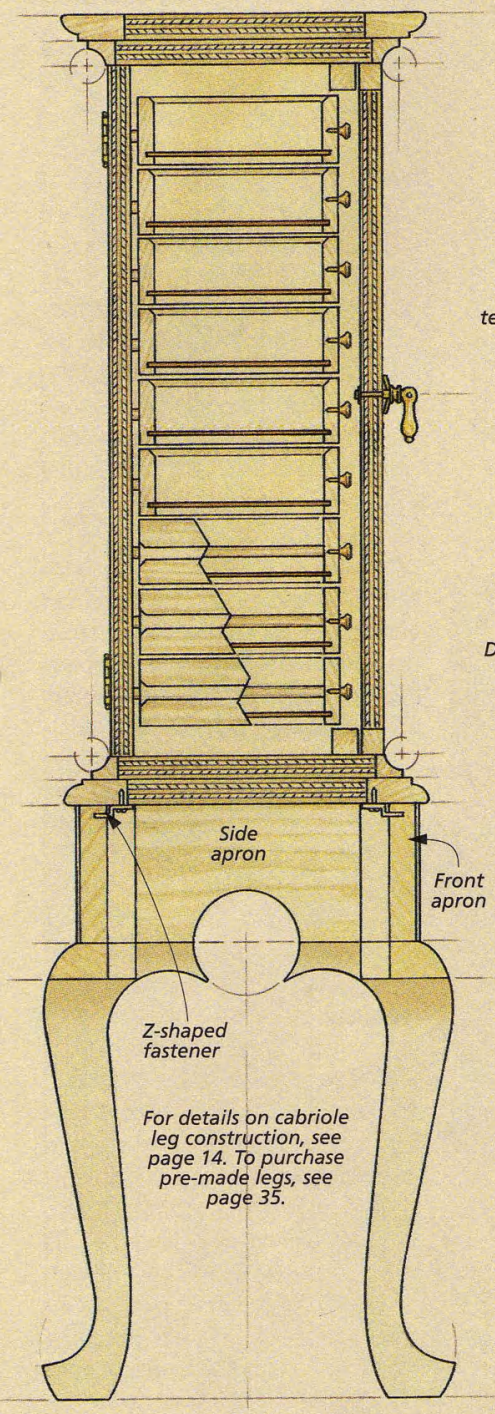

For details on cabriole leg construction, see page 14. To purchase pre-made legs, see page 35.

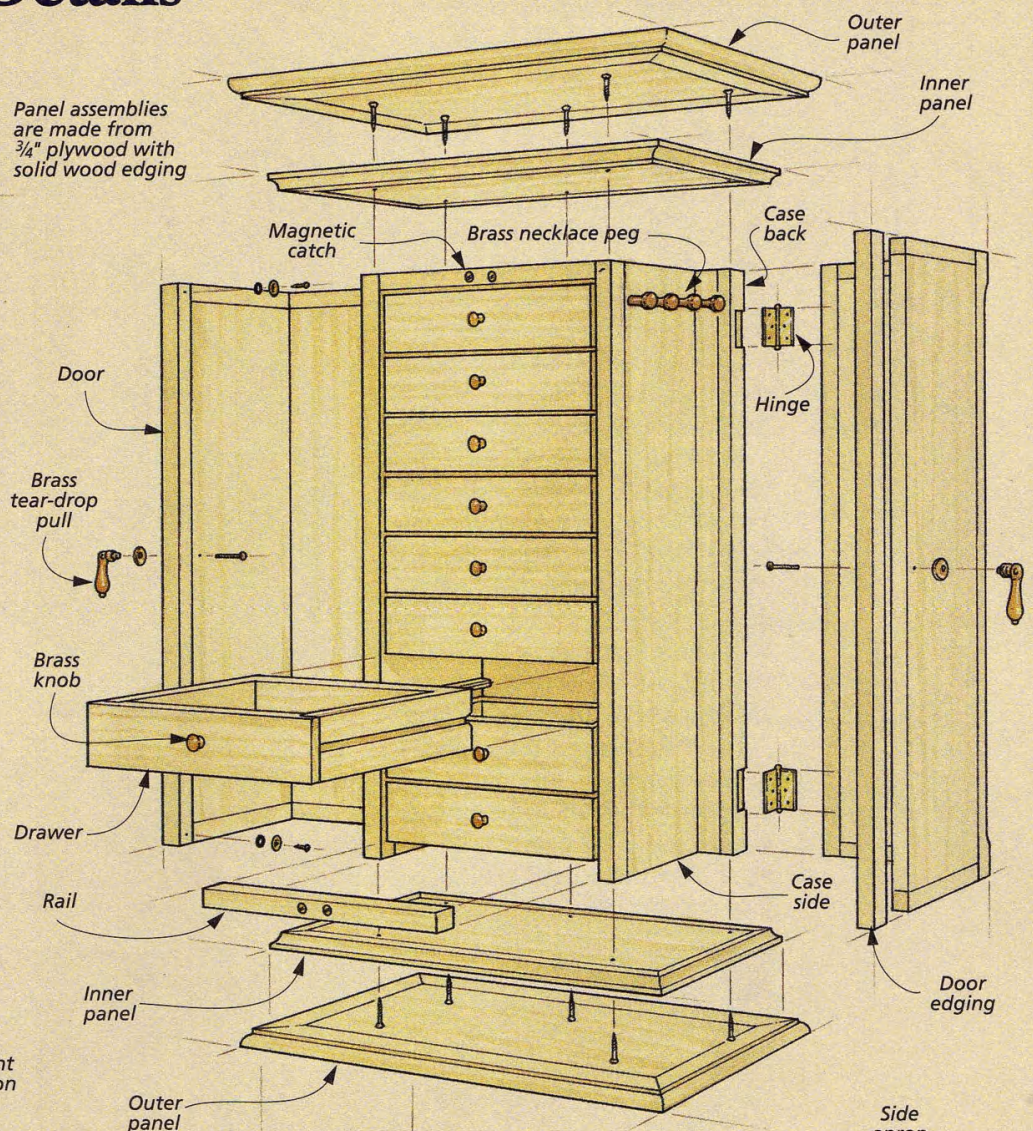

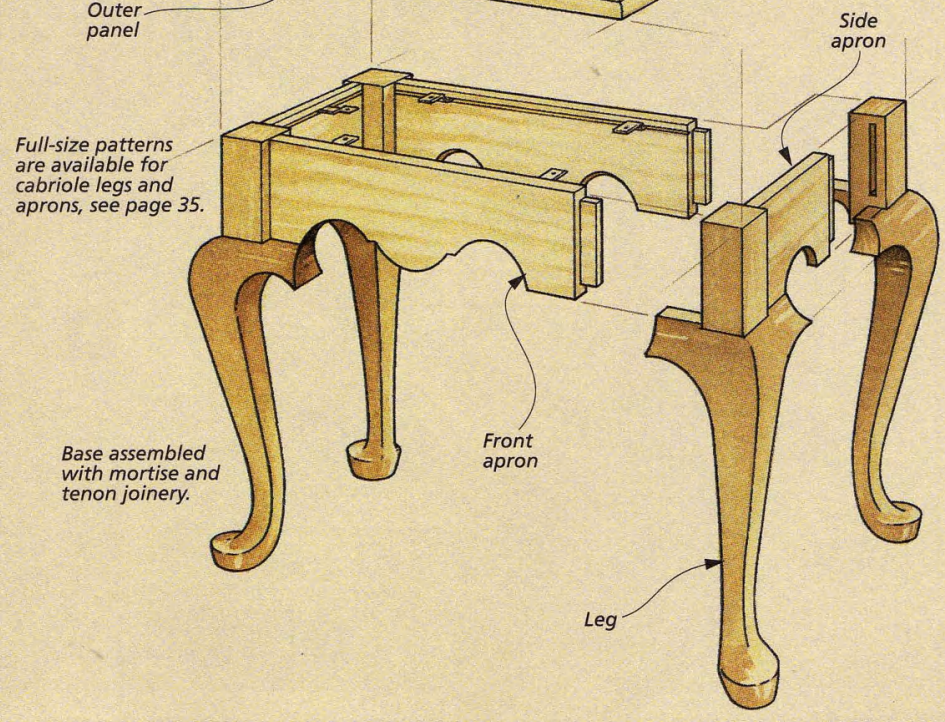

Case

This jewelry cabinet is constructed in two parts. A storage case containing nine drawers sits upon a base with cabriole legs. I built the case first, then sized the base to fit.

BACK PANEL. I started with the **back (A)** of the case, see exploded view. This is a piece of ¾"-thick plywood cut to size and edged with ¾" x ¾" solid wood **case edging (B)** and then trimmed flush, see detail 'b'.

Then I cut two ¼"-wide grooves on the inside face of the panel to hold the side panels, see detail 'a'.

SIDE PANELS. With the back panel complete, I cut two plywood **sides (C)**. But before edging the sides, I cut a series of dadoes on the inside edges. These ¼" x ¼" dadoes will hold the drawer guides. In order for the drawers to slide in and out without binding, each pair of guides must line up exactly when the case is assembled.

To evenly space the dadoes for the guides, I used an indexing jig. But first I started by cutting the top dado on each side 1 11/16" from the end, see Fig. 1. Then I added a ¼" indexing pin to an auxiliary fence and attached the fence to my miter gauge.

After adjusting the fence so the indexing pin is 1 13/16" from the blade, place the side panel against the fence so that the first dado fits over the indexing pin. Now you can cut the rest of the dadoes just like you would cut dentil molding, see Fig. 2 (or refer to the dentil molding jig on page 18).

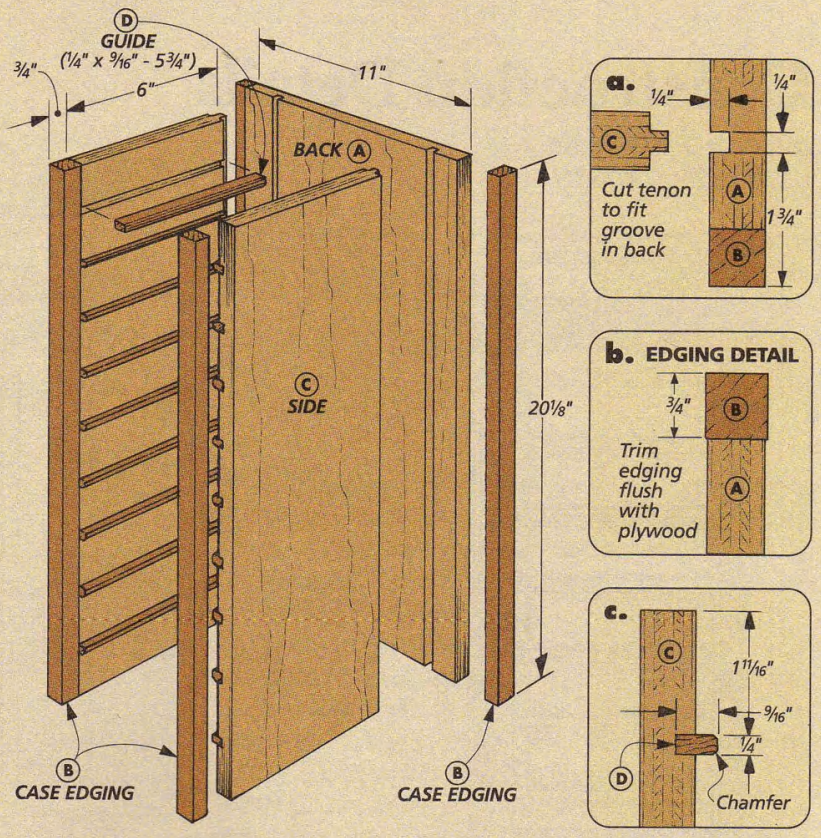

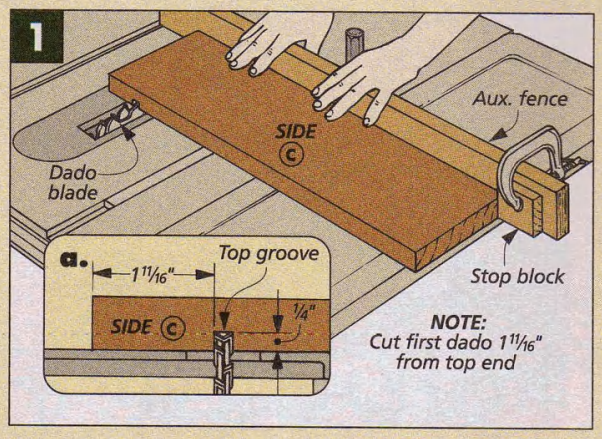

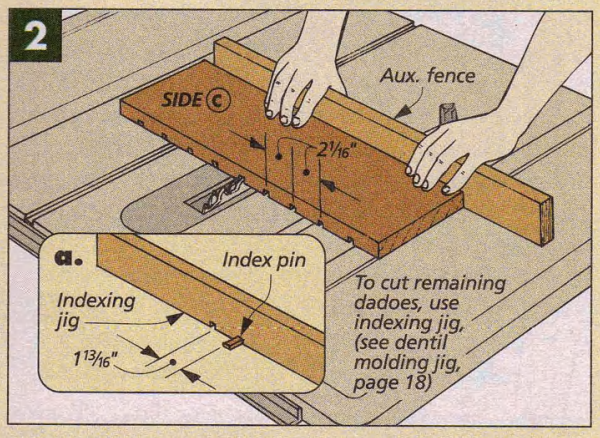

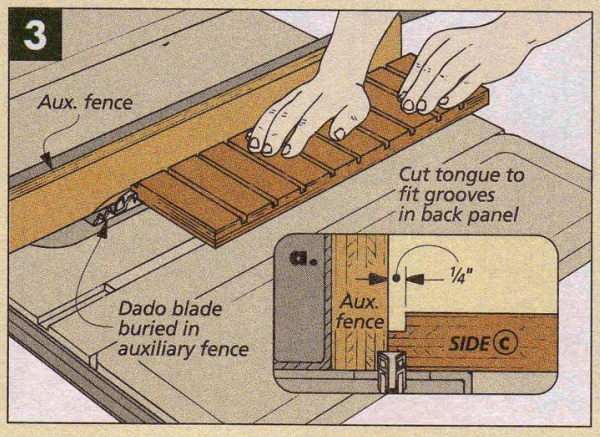

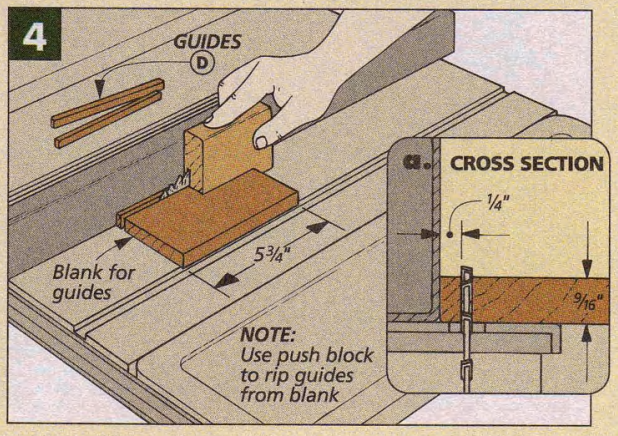

With the dadoes cut, I added **case edging (B)** to the front edges of the side panels, see exploded view. Then on each back edge, I cut a tongue that fit snug in the grooves already cut in the back panel, see Fig. 3.

DRAWER GUIDES. Before assembling the sides and back, I added **drawer guides (D)** to the dadoes in the sides, see detail 'c' on page 8. These guides are simply thin strips of wood that support and guide the drawers.

To make the guides, I planed down a blank to 9/16" thick, cut it to length, and then ripped 1/4"-wide strips, see Fig. 4. Use a push block to keep the guides from getting pinched between the saw blade and the fence.

The guides are glued into the dadoes. Then using a sanding block, I sanded a slight chamfer on the edges of the guides to help the drawers operate smoothly, see detail 'c'.

SIDE & BACK ASSEMBLY. With the guides in place, the sides and back panels can be glued together, see exploded view above right. Note: To keep the side panels square to the back when gluing them up, I used a squaring block.

INNER PANELS. The top and bottom panels are both made up of an inner and outer layer of edged plywood, see exploded view.

The **inner panels (E)** are made of 3/4" plywood and edged on all four sides with 3/4"-wide **inner panel edging (F, G)**, see exploded view. This edging is mitered at the corners and glued in place. Then a cove is routed on one side, see Fig. 5.

Attach the inner panels to the case with screws, making sure to screw into the solid wood edging on the sides and back, see details 'a' and 'b'.

OUTER PANELS. The **outer panels (H)** are built the same as the inner panels, with two exceptions. The **outer panel edging (I, J)** is 1 3/4" wide, see Fig. 6. The wider edging not only looks better, but it will hold screws more securely when the case is attached to the base.

Another difference is that I routed a 1/8" roundover on the outside edges and then a 1/2" roundover on the inside edges, see Figs. 6a and 6b. Then the outer panels are simply glued in place, see Figs. 7 and 7a.

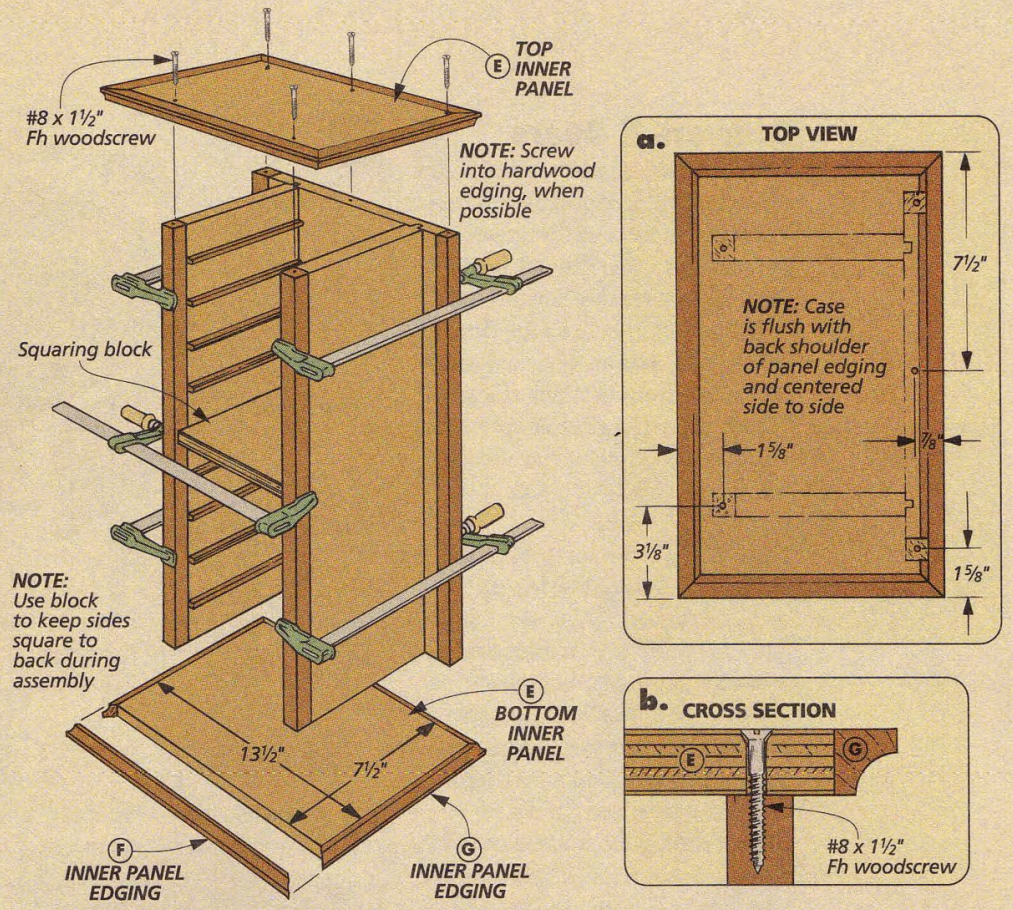

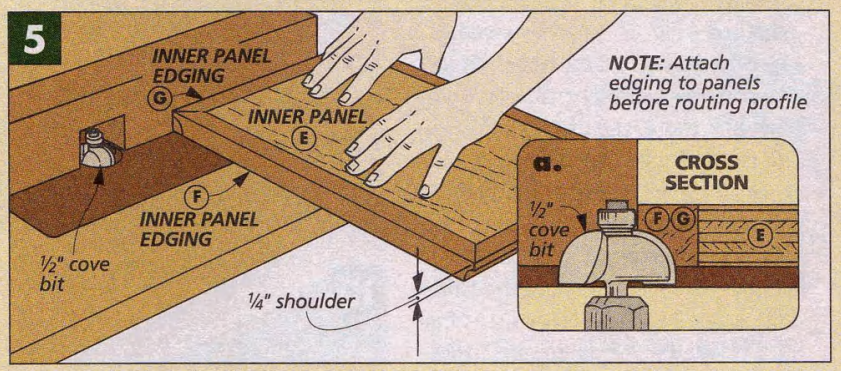

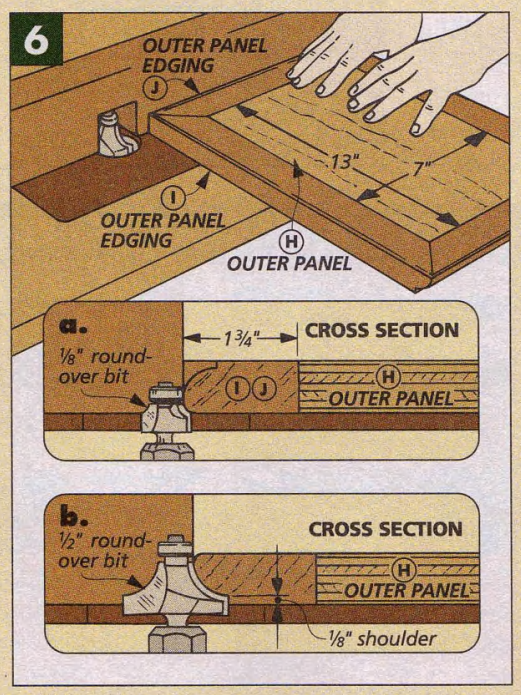

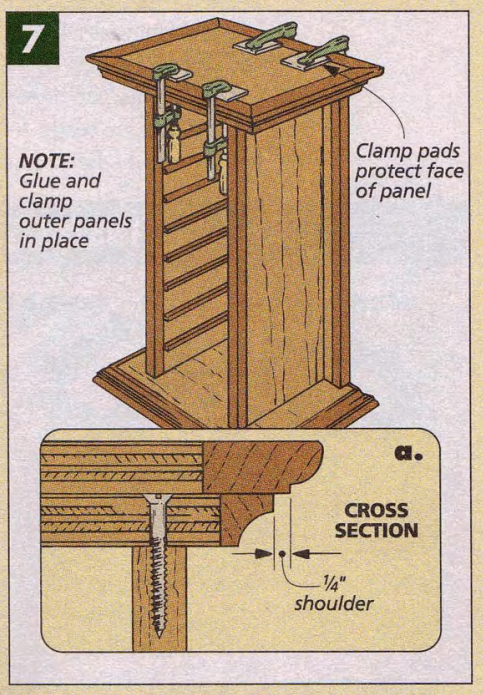

Drawers & Doors

With the cabinet case completed, I began making the set of nine drawers that fit inside. Since all the drawers are the same size, you can quickly build them in an assembly line fashion.

To start with, I cut all the **drawer fronts (K), backs (L)**, and **sides (M)** to size from ½"-thick stock, see Fig. 8. Note: The drawers are sized to allow for a 1/16" clearance gap around each drawer. (Mine were 2" tall and 7⅞" wide.)

Rabbets cut on each end of the front piece hold the sides and also serve as drawer stops, see Fig. 8a. And each side piece receives a rabbet at one end to hold a back piece, see Fig. 8b. Then, to allow the drawers to ride on the drawer guides, cut a centered groove along the length of each side piece, see Fig. 8c.

After cutting the rabbets and side grooves, I added an ⅛"-wide groove for a drawer bottom to all the drawer pieces, see Fig. 8c. Now dry assemble the drawers and cut the **bottoms (N)** to size from ⅛"-thick hardboard. Then glue and clamp the drawers (including the bottoms) together.

Once the glue had dried, I added a few finishing touches to the drawers. First, I routed a ⅛" chamfer around the inside to soften the sharp edges, see Fig. 9. Then using a chisel, I created a "bird's mouth" opening at the end of the grooves to make it easier to insert the drawers onto the drawer guides, see Fig. 10.

DOORS. With the drawers completed, the case is ready for the doors, refer to Fig. 14. Each door is made up

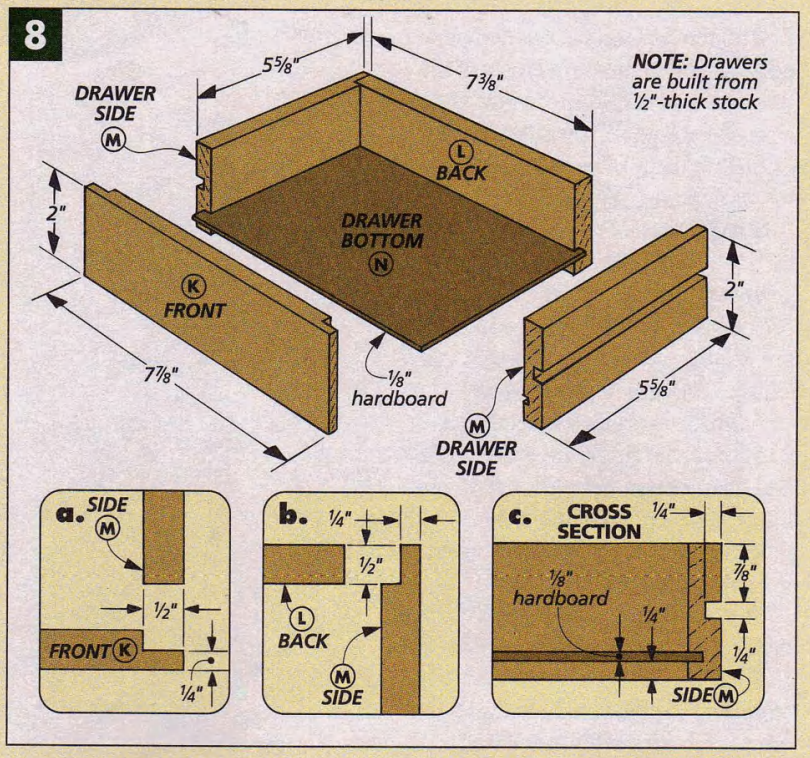

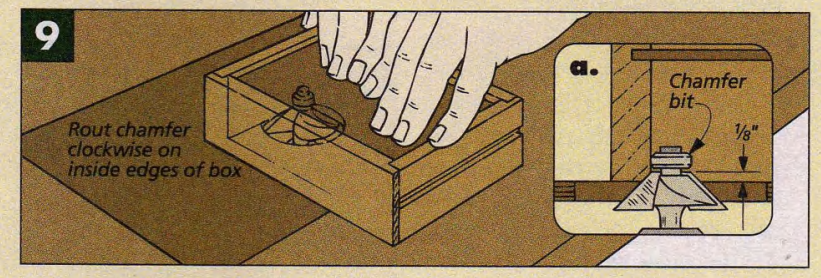

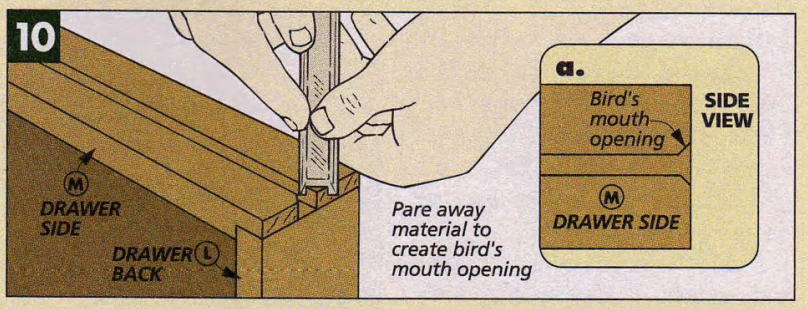

INSTALLING FABRIC TO INTERIOR OF DRAWERS

Liners. *I lined some of the drawers with velvet-covered pieces of posterboard. Mount the fabric with tape and spray adhesive.*

Custom Foam Inserts. *I made foam inserts for rings by cutting kerfs in blocks of rigid insulation (blueboard). Then I covered the blocks with fabric. Press the fabric into the kerfs with a straightedge and tape it in place. Then carefully slip the insert into the drawer.*

of two pieces of plywood joined together in an L-shape. This way, the doors swing open allowing complete access to necklaces and other jewelry hanging from the sides of the case.

I started on the doors by cutting **side panels (O)** and **front panels (P)** to finished size, see Fig. 11. Then to hide the edges, I cut and glued **door edging (Q)** to the panels.

The front panels are edged on all four sides. But the side panels are only edged on three. Then the side panels are glued to the front panels. I used a square to help glue them together in a perfect right angle, see Fig 11a.

Then to complete the doors, I drew layout lines and used a hand-held router to rout 1/8" stopped chamfers on the outside corners, see Fig. 12.

HANGING DOORS. Finally, I completed the case of the jewelry cabinet by hanging the doors with 2" butt hinges, see Fig. 13. These are mortised into the case back but are simply screwed to the inside face of the doors.

When hung correctly, the doors should be centered top to bottom, and the sides should end up flush with the molded edging on the top and bottom of the case.

MAGNETIC CATCH RAILS. To keep the doors closed, I used magnetic catches. These catches are installed in a pair of **rails (R)** made out of 3/4"-thick stock, see Fig. 14. The rails fit between the side panels of the case. I sized mine to create a 1/16" gap between the rails and the drawers (3/4" in my case). Before gluing them in place, I drilled two 11/32" holes for the catches.

I used C-clamps to install the catches in the holes, see Fig. 14a. Then I installed the catch plates, aligning them with the catches, see Fig. 14b. To adjust the doors in or out, I used a trick with O-rings as spacers under the catch plates, see Fig. 14b. For more on this, see Shop Notes on page 19.

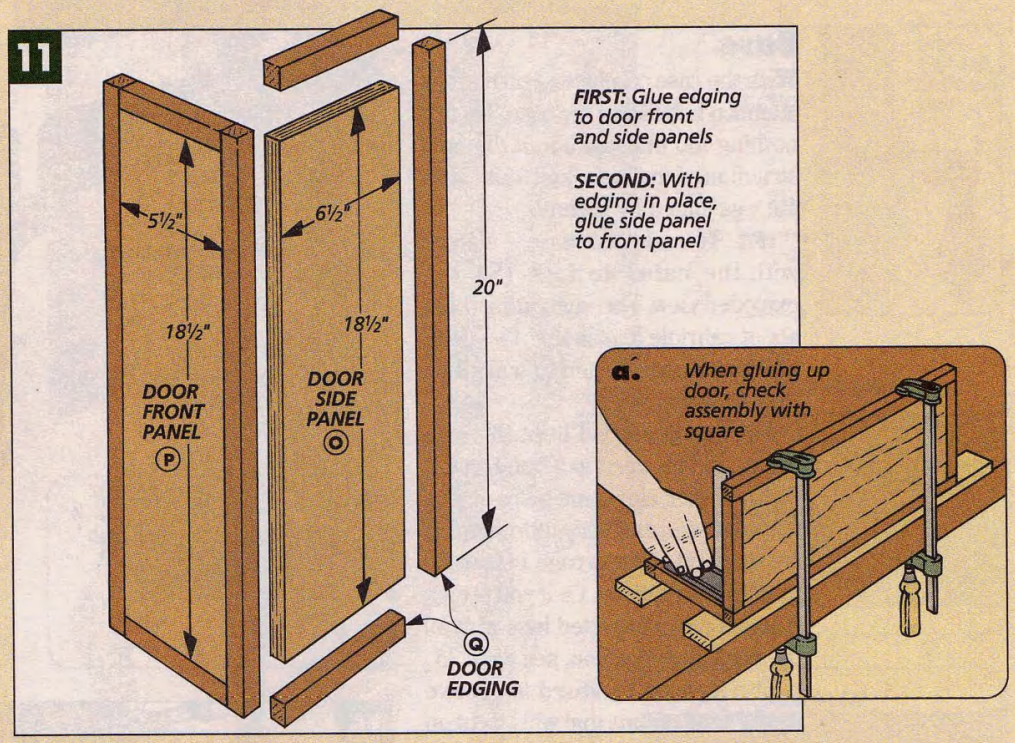

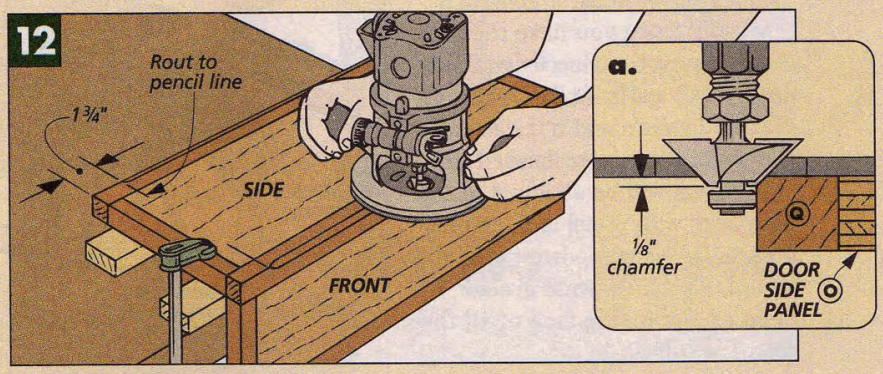

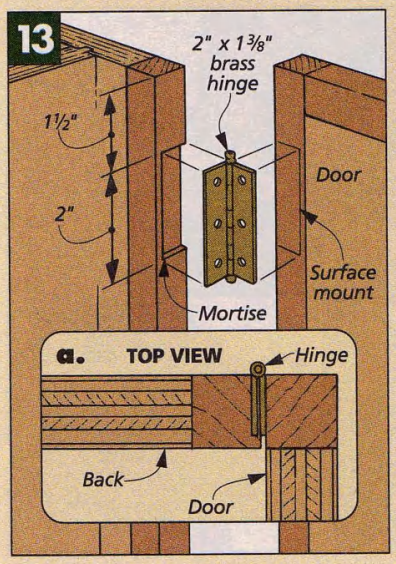

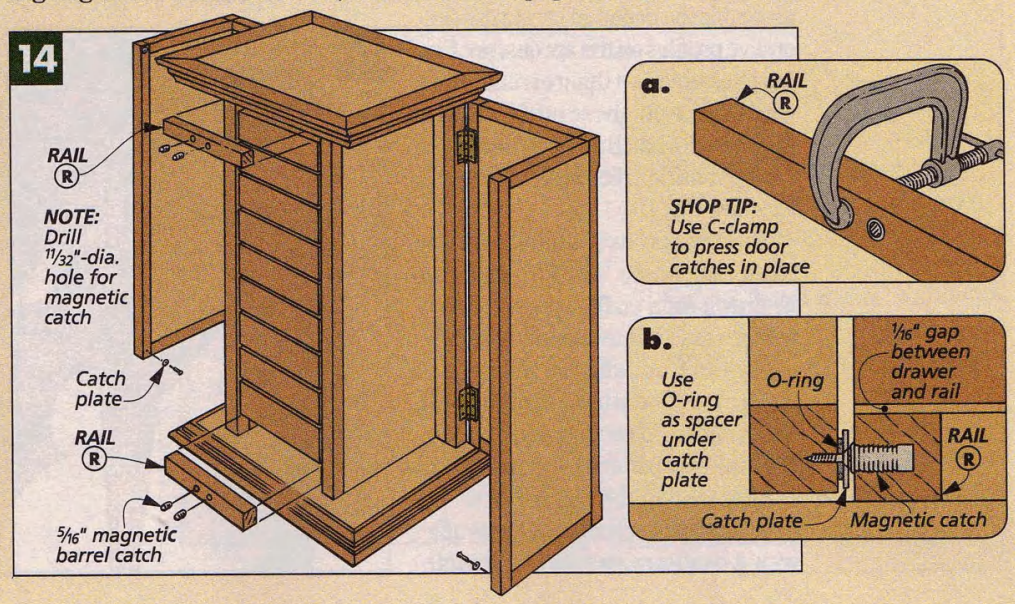

Base

With the case complete, I turned my attention to building the base. There's nothing too unusual about the construction of the base: just four cabriole legs joined by aprons.

LEGS. To make the base, I started with the **cabriole legs (S)**, see exploded view. The interesting thing about cabriole legs is that they look a lot more complicated to build than they actually are.

For this project, I kept the legs basic. All you need is a band saw, a drum sander, and some rasps or files — no carving and very little shaping are required. Refer to page 14 for step-by-step instructions. Or if you prefer, you can buy completed legs with all the work done for you, see page 35.

The legs are mortised to receive the 3/4"-long tenons that will be cut on the aprons, see detail 'a' above left.

APRONS. Once you have the legs ready, they can be connected with **side aprons (U)** and **front/back aprons (V)**, see details 'c' and 'd'. I started by cutting these pieces to finished size.

The case will be attached to the base later with metal table top fasteners. To accommodate these fasteners, I cut a 1/8"-wide groove 3/8" deep on the inside face of all the pieces, see detail 'b'.

After cutting the grooves, tenons are cut to fit the mortises cut in the cabriole legs. These tenons can be cut quickly with a dado blade and auxiliary fence set up on the table saw.

PROFILE. The next step is to dry assemble the base and lay out the decorative profiles on the aprons, see Fig. 15. The important thing to remember when laying out these profiles is that they have to match up with the curves on the transition blocks of the cabriole legs, see Fig. 15.

The side aprons have a simple centered radius, see Fig. 15a. This can be drawn right on the aprons, cut out with a band saw, and sanded smooth.

For the front and back aprons, I made a hardboard template that's laid out using a grid pattern, see Fig. 15b. (For full-size patterns, see page 35.)

After tracing the pattern onto the front and back aprons, cut the profile with a band saw and sand it smooth

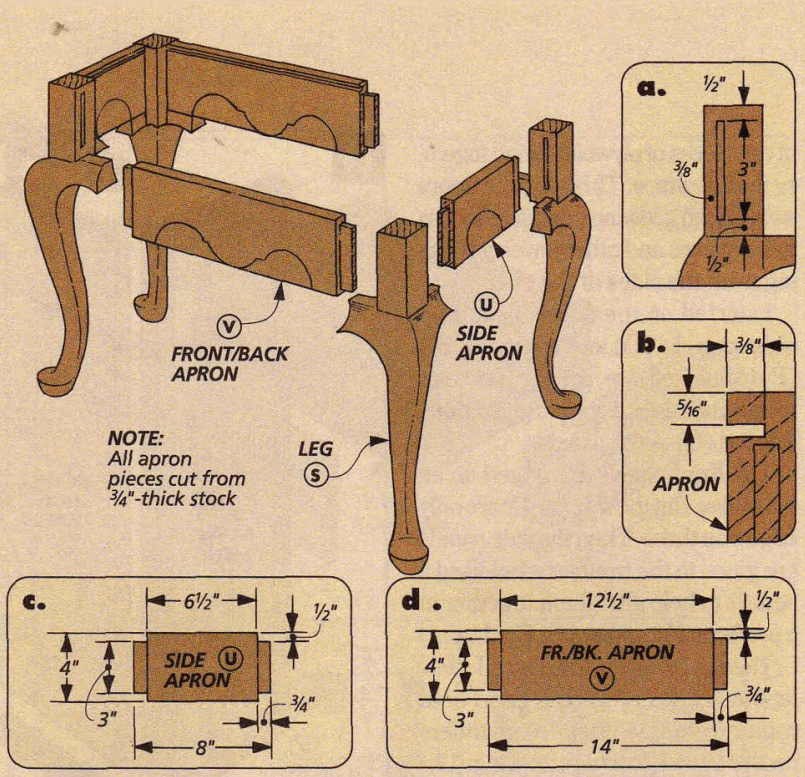

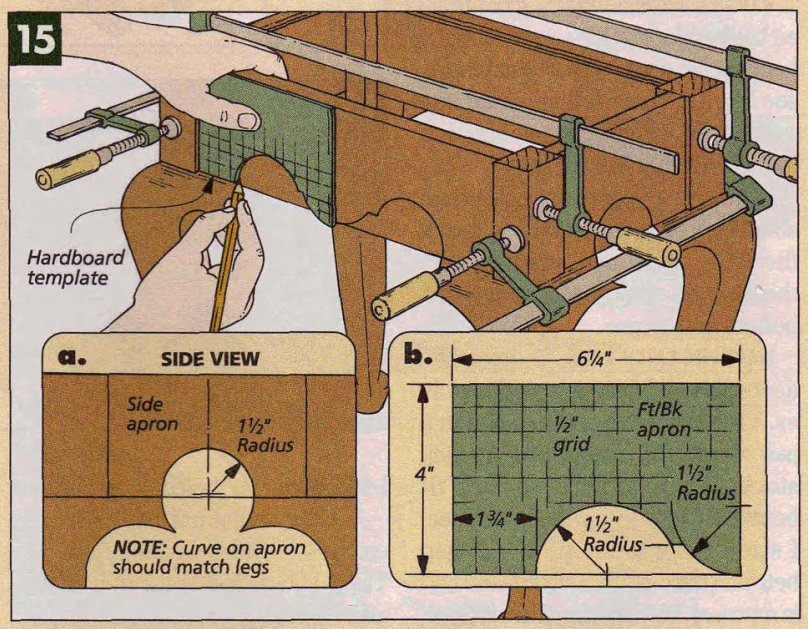

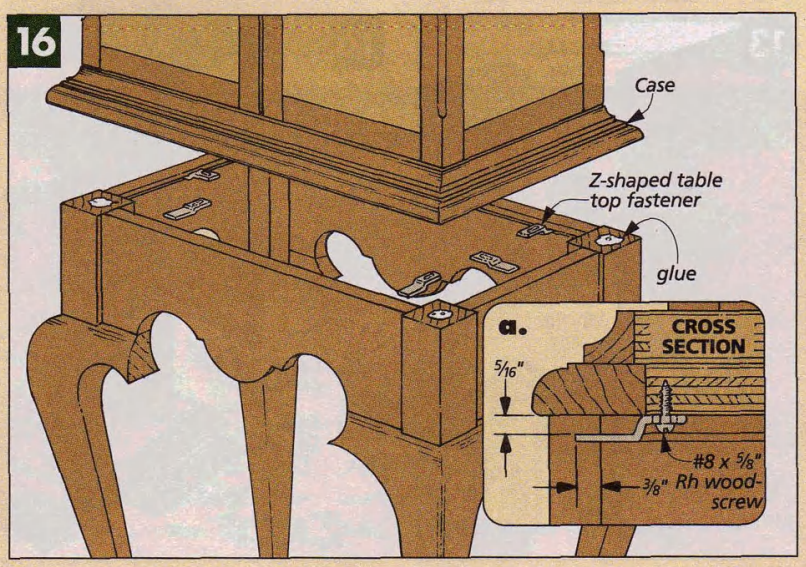

the same as you did with the sides.

ASSEMBLY. With the aprons complete, you can glue and clamp the base together. Just check to make sure the base remains square after tightening the clamps.

Once the glue dries, set the case on the base and center it front to back and side to side, see Fig. 16. Then install table top fasteners in the grooves and attach the other ends to the case bottom with screws.

FINISH & HARDWARE. To complete the jewelry cabinet, I applied a finish (two coats of varnish rubbed out to a high sheen) and installed the door and drawer hardware, see exploded view.

To finish off the cabinet and give it an extra touch of elegance, I used brass hardware. I mounted brass "teardrop" pulls on the cabinet doors, see detail 'a'. The drawers each received a simple brass knob, see detail 'b'.

Finally, I added specially designed brass pegs on the case sides to hang necklaces and bracelets, see detail 'c'. These require shallow holes and a little epoxy to hold them in place. W

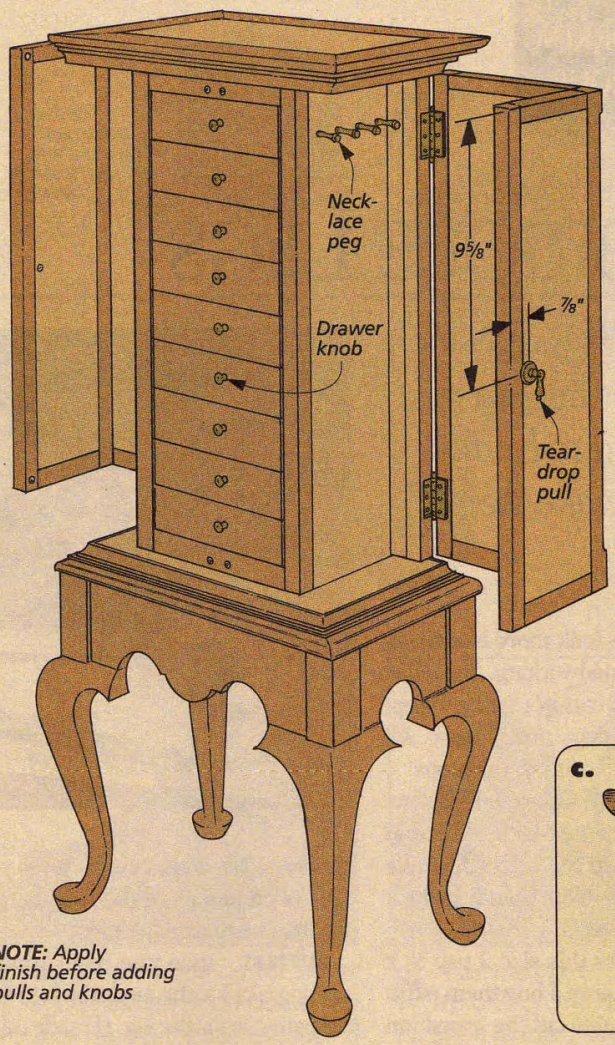

NOTE: Apply finish before adding pulls and knobs

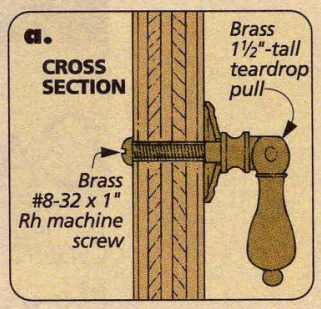

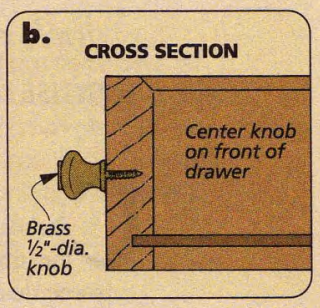

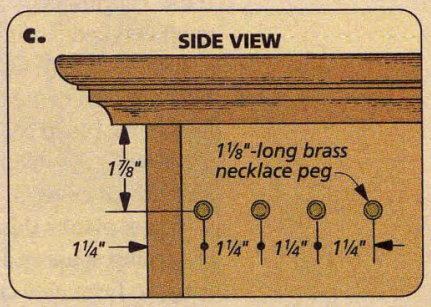

MATERIALS

CASE

A	Back Panel (1)	¾ ply. - 11 x 20⅛
B	Case Edging (4)	¾ x ¾ - 20⅛
C	Side Panels (2)	¾ ply. - 6 x 20⅛
D	Guides (18)	¼ x 9/16 - 5¾
E	Inner Panels (2)	¾ ply. -7½ x 13½
F	In. Panel Edging (4)	¾ x ¾ - 16 rgh.
G	In. Panel Edging (4)	¾ x ¾ - 10 rgh.
H	Outer Panels (2)	¾ ply. - 7 x 13
I	O. Panel Edging (4)	¾ x 1¾ - 17 rgh.
J	O. Panel Edging (4)	¾ x 1¾ - 11 rgh.
K	Dwr. Fronts (9)	½ x 2 - 7⅞
L	Dwr. Backs (9)	½ x 2 - 7⅜
M	Dwr. Sides (18)	½ x 2 - 5⅝
N	Dwr. Bottoms (9)	⅛ hrd. bd. - 5⅜x 7⅜
O	Door Sd. Panels (2)	¾ ply. - 6½ x 18½
P	Door Fr. Panels (2)	¾ ply. - 5½ x 18½
Q	Door Edging	¾ x¾ - 16 ft. rgh.
R	Catch Rails (2)	¾ x ¾ - 8

BASE

S	Cabriole Legs (4)	3 x 3 - 17¼
T	Transition Blocks (8)	2⅛ x 2½ - 1½
U	Side Aprons (2)	¾ x 4 - 8
V	Fr./Bk. Aprons (2)	¾ x 4 - 14

CUTTING DIAGRAM

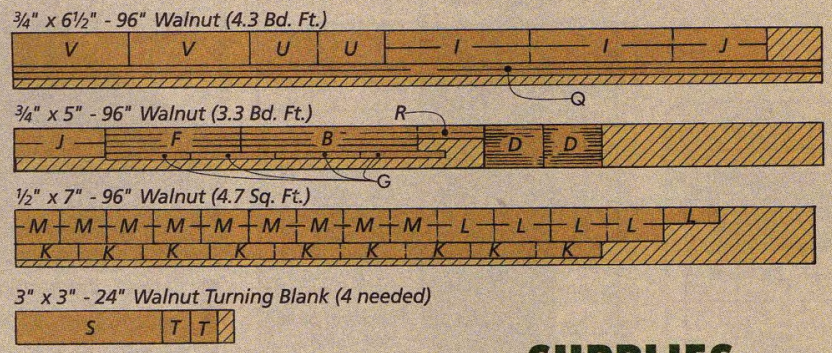

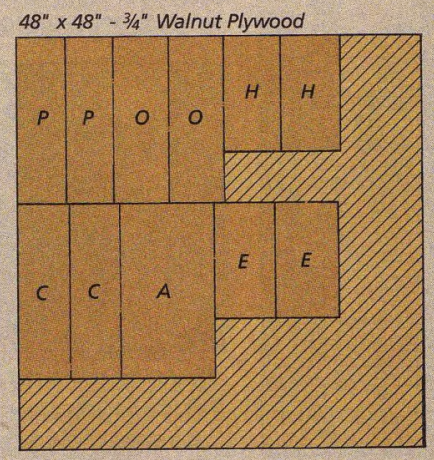

SUPPLIES

- (9) ½" x ½" Brass Knobs w/Studs
- (6) #8 x ⅝" Rh woodscrews
- (2 pr.) 2" x 1⅜" Ball-tipped Hinges
- (4) 5/16"-dia. Magnetic Catches w/Strikes
- (2) 1½"-tall Teardrop pulls with 1"-dia. Back Plates
- (2) #8-32 x 1" Brass Rh Machine Screws
- (6) Z-shaped Table Top Fasteners
- (4) 3/16"-dia. Rubber O-rings
- (10) #8 x 1½" Fh Woodscrews
- (8) 1⅛" Brass Necklace Pegs

CABRIOLE LEGS

Cabriole legs may look like sculpture, but you don't need to be an artist to make them.

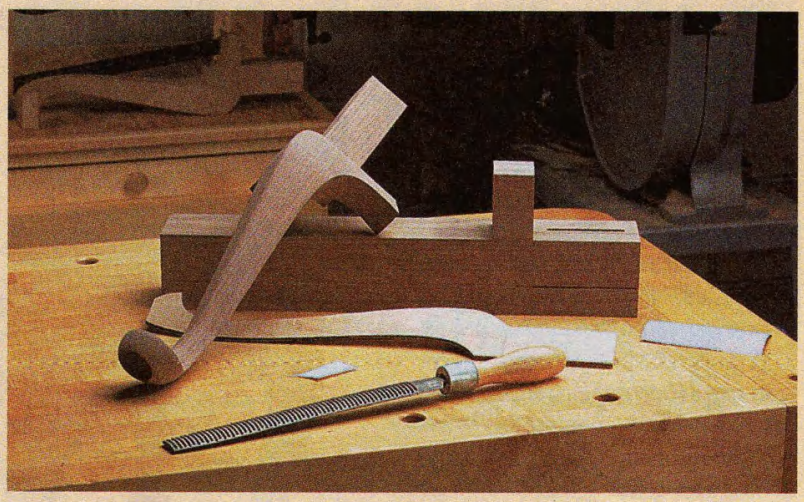

Cabriole legs look more like sculpture than woodworking. And while some designs can get fancy, I kept these cabriole legs pretty basic. All you need to do is follow the steps.

TURNING BLANKS. Cabriole legs start out as thick, square blanks. To avoid joint lines, I used solid stock to make the legs. The problem is finding stock that's thick enough.

To get blanks this size, I use 3" x 3" turning squares. I buy them extra long, so I can also cut the transition blocks from the blank. Turning squares often come rough cut, so you may need to square them up before you can begin on the legs.

PATTERNS. Once you have square turning blanks, the next step is to create patterns for the leg. (I made mine out of 1/8" hardboard.) There are two patterns: one for the leg and another for the inside faces of the transition blocks (added later). You can use the patterns shown below left or order full-size patterns, see page 35.

Note: Though the same leg pattern works for the jewelry cabinet and cof-

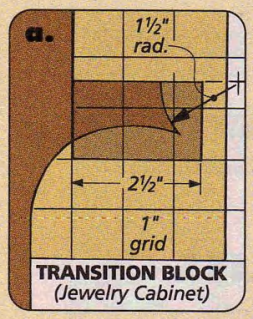

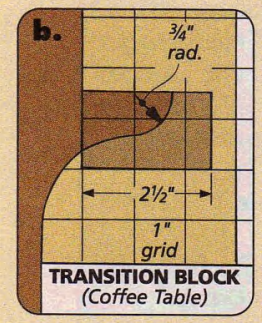

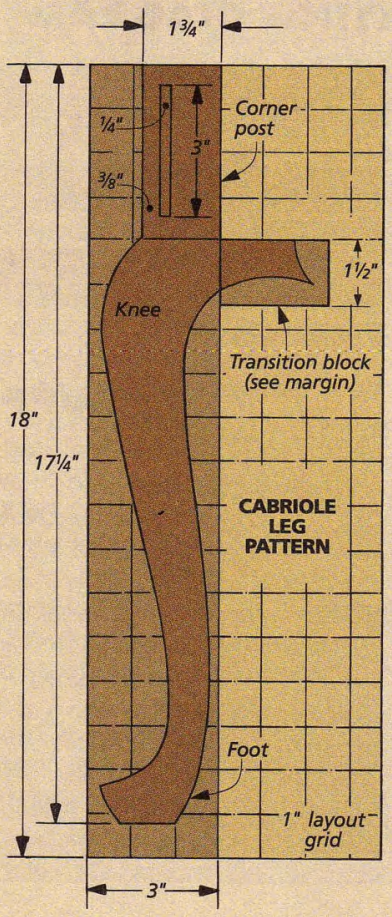

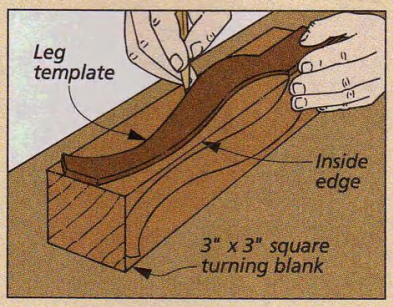

1 *To draw the pattern, position template so back edge of corner post aligns with inside corner of blank. Flip template and repeat on adjacent side.*

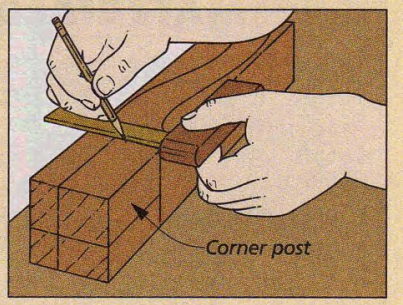

2 *Next, use a square to draw reference lines around all four faces of the blank to indicate where the corner post meets the knee.*

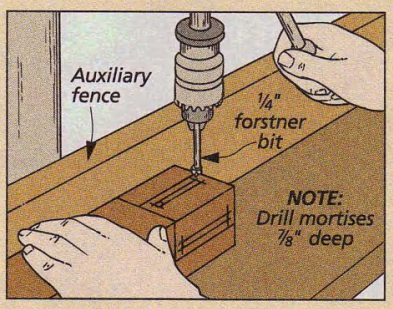

3 *At this point, cut the mortises on the two faces with the patterns. Drill a series of overlapping holes. Then clean up the cheeks with a chisel.*

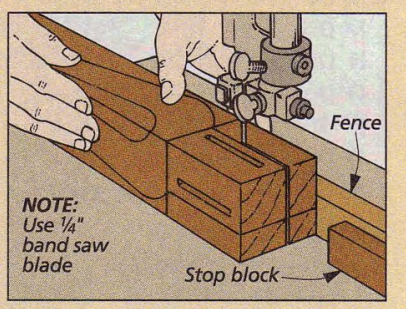

4 *Set up band saw to make the face cuts on the corner post. Use a fence to guide the leg and clamp a stop block to the fence.*

fee table, the patterns for the transition blocks are slightly different, see details 'a' and 'b' on page 14.

CORNER POST. After the shape of the legs are laid out, it's time to work on the blank. I start with the corner post at the top, back edge of the leg.

TRANSITION BLOCKS. While working on the corner post, you'll have to add two, rectangular transition blocks, see drawing at right. These blocks are glued on over the knees of the legs. They should also line up with the reference lines between the corner post and the knee so they end up square.

CUTTING THE LEGS. After the transition blocks are in place and the corner post is completed, it's time to cut the leg out. This is done in two steps. First, all the cuts are made along one face of the leg. Since these cuts remove part of the pattern on the adjacent face, you need to save the waste pieces. Then you simply tape them back onto the blank and cut the curves on the adjacent face.

Now, while the leg is still relatively square, I sand the faces with a drum sander on the drill press. (You'll need an auxiliary table to do this.)

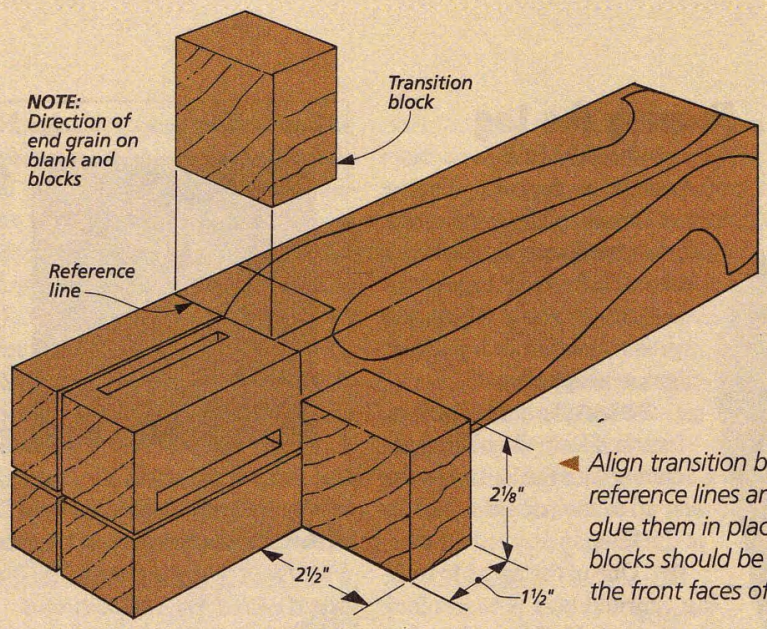

Align transition blocks on reference lines and carefully glue them in place. These blocks should be flush with the front faces of the leg.

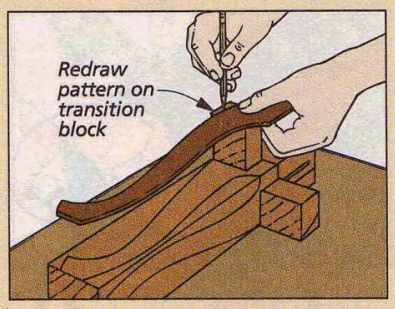

5 *Redraw the knee on the outer faces of the transition blocks. The reference line on the pattern should align with the transition block.*

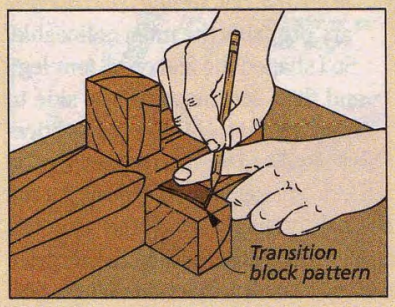

6 *A second pattern is used to trace a profile on the inner faces of the transition blocks. Place this pattern in the corner and mark the outline.*

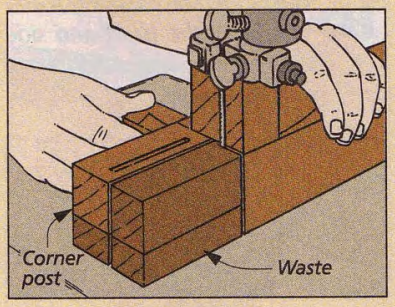

7 *Start sawing at the corner post by aligning blade with top of transition block. Saw to the kerf. Then repeat the cut on the adjacent face.*

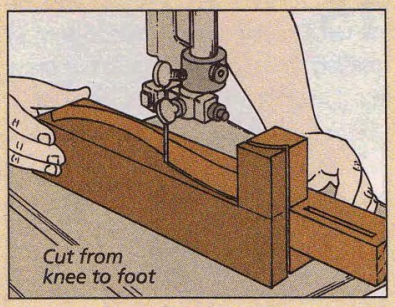

8 *To cut the front face of the leg, start at the knee and saw around to the foot in one smooth pass. Be sure to save the waste piece.*

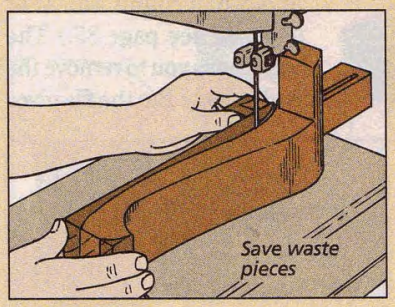

9 *Cut the back of the leg just like the front. A second cut is needed to form the transition block. Again, save the waste pieces.*

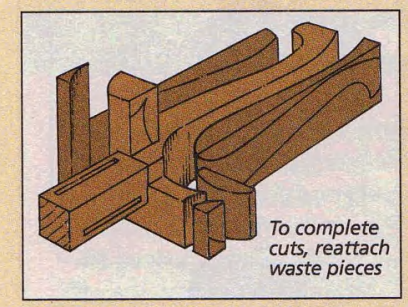

10 *The waste pieces are needed when cutting the remaining faces of the leg blank. Tape the pieces to the blank in their original position.*

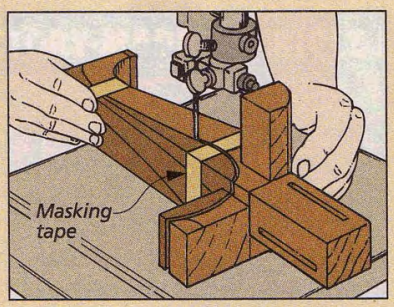

11 *Now, finish roughing out the leg by repeating the cuts on the front and back faces. Again, work from the knee to the foot.*

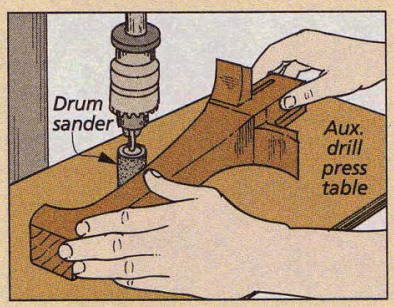

12 *At this point, the "square" legs can be sanded with a drum sander. But a larger auxiliary table will need to be added to the drill press.*

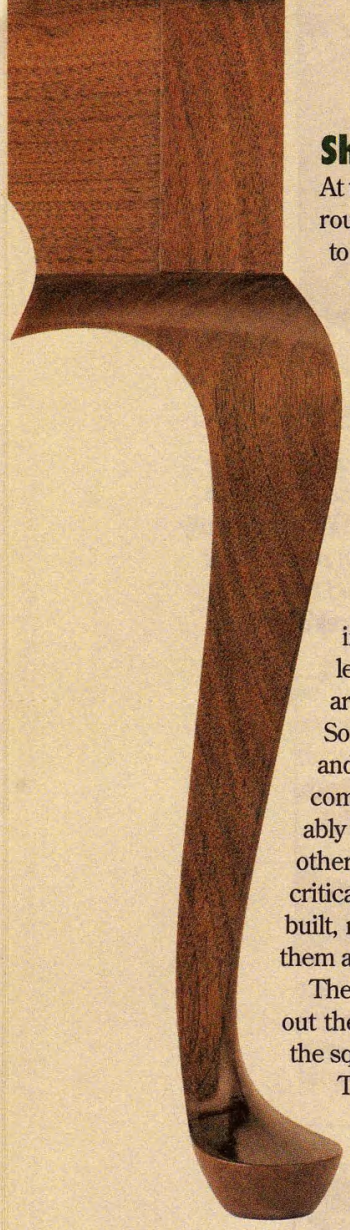

Shaping the Leg

At this point, the blanks have been roughed out, so they're beginning to look like cabriole legs. But all the edges are still square. So now, it's time to do the final shaping that will soften these edges and give the cabriole legs their graceful appearance.

SEQUENCE. To shape the legs, I worked from the bottom up, starting with the foot and moving up to the transition blocks at the knee.

FEET. One of the tricks to making cabriole legs is to get four legs that look *similar*. And the feet are probably the most noticeable. So I shaped the feet on all four legs and then set them side by side to compare them. If one was noticeably smaller, I worked on getting the others to match it. But don't be *too* critical. After all, when the project's built, no one will be able to compare them as closely as you can now.

The first step for each foot is to lay out the final radius on the top. Then the square corners can be sawed off.

To do the shaping, I used a rasp and a half-round file. (For sources, see page 35.) The rasp allows you to remove the wood quickly. But the file gives

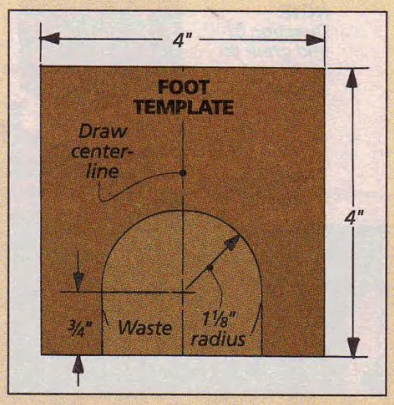

13 *To begin shaping the legs, first make a template to draw outline of foot. This is a piece of ⅛" hardboard with a 1⅛"-radius cutout.*

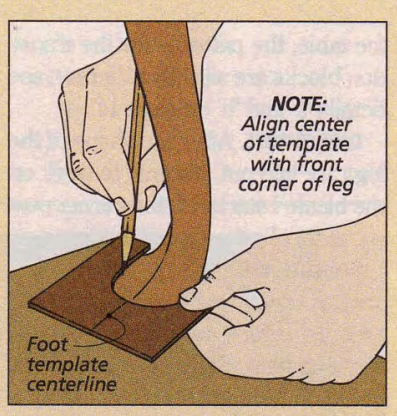

14 *Now that the template has been made, the top of the foot can be laid out. Set the template on the foot and trace the outline.*

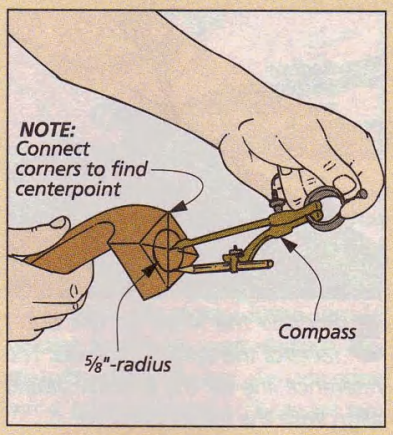

15 *Turn the leg over and find the centerpoint on the bottom of the leg. Then use a compass to draw a circle on the bottom of the foot.*

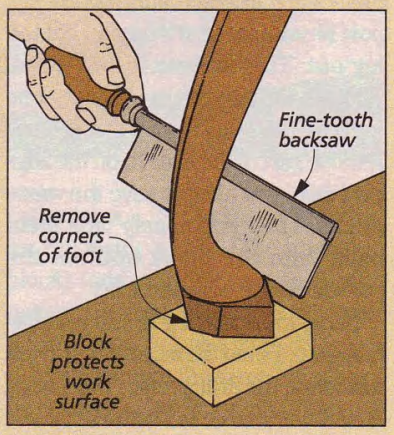

16 *Next, hold the leg upright and cut away the front and side corners of the foot with a hand saw held at a slight angle.*

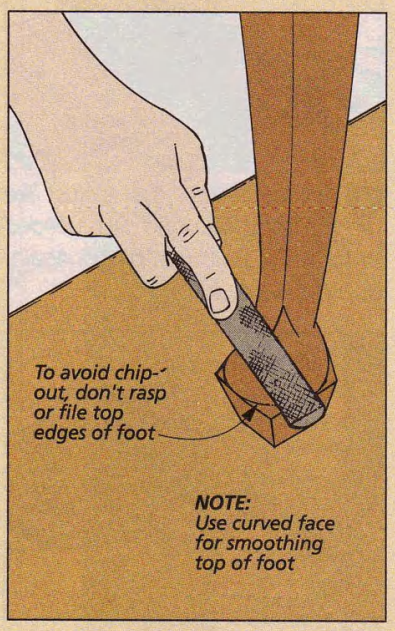

17 *Still holding the leg upright, file the top face of the foot. Remove the sharp line from the center and feather it out across the top.*

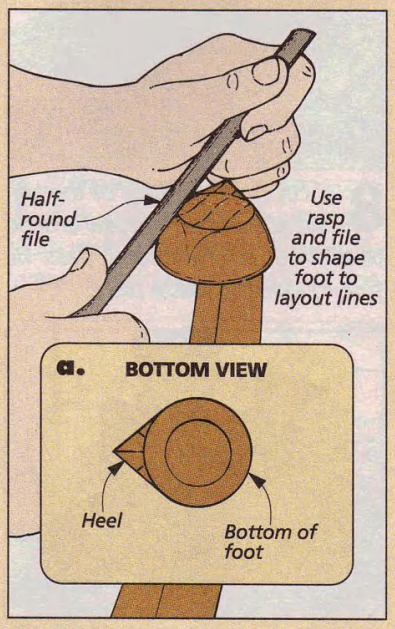

18 *Clamp the leg in a vise and shape the front and sides of the foot, working from top of the foot to the bottom to prevent chipout.*

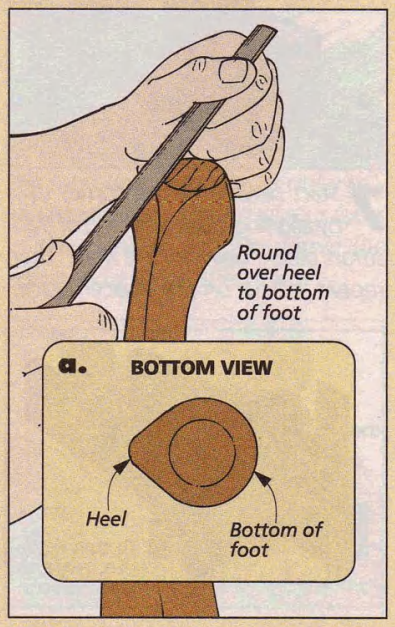

19 *Next, shape the back of the heel by blending the radius on the bottom of the foot into the back of the ankle.*

you a cleaner cut. Both have a curved edge for cleaning up the top of the foot and a flat edge for shaping the sides of the foot.

LEGS. Once the feet were done, I started on the legs. There's not much to these. The front and back corners of the legs get a small, tapered roundover with a file and some sandpaper. But these roundovers aren't the same for the front and back. The front gets rounded over a little more, see Steps 20 and 22. The side corners are just softened with sandpaper.

Shaping the legs is no trouble. The problem is holding them steady while you work. And you need some freedom to rotate the leg and work from different angles. So I came up with a shop-made carver's cradle by adding wooden extenders to the jaws of a common 3/4" pipe clamp, see page 19.

KNEES. The last area of the leg to work on is the knee, including the transition block. There's not much shaping to do. It's mostly just cleanup.

To begin, I removed the ridge between the corner post and the knee with a sharp chisel. But here, you have to work carefully. A slip with the chisel can put a scratch in the corner post which will be a chore to remove.

Next, I dry assembled the aprons and marked the location of their outside faces. Then I rounded over the top of the transition block with sandpaper, removing the hard edge.

All that's left is to sand the leg to get it ready for the finish. If you're going to use stain, the trick is to get a consistent color. To do this, I used a wood conditioner, see page 30. W

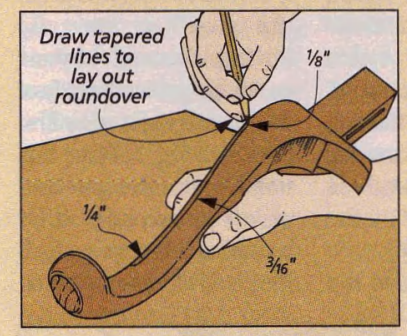

20 *Lay out marks to show the tapered roundover on the front corner. Connect the marks by drawing lines up and down the leg.*

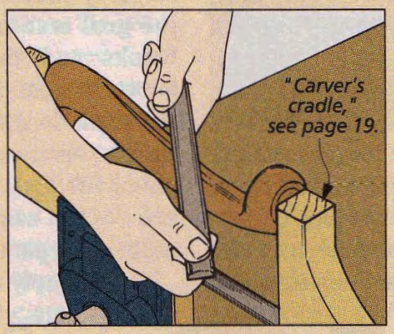

21 *Now with a file and some sandpaper, round over the front edge of the leg, following the layout lines that were just drawn.*

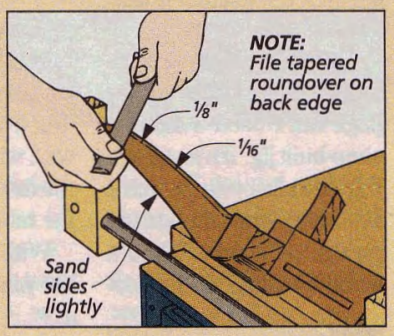

22 *The back edge also gets a tapered roundover — though not as much as the front. Also lightly sand both side edges of the leg.*

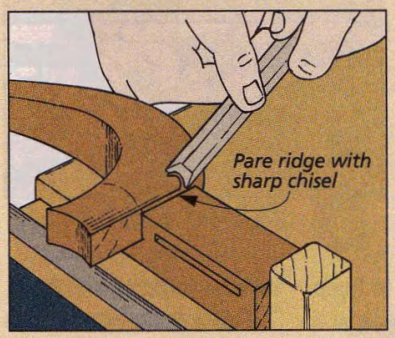

23 *Between the corner post and the beginning of the knee, there may be a small ridge. This can be carefully pared away with a chisel.*

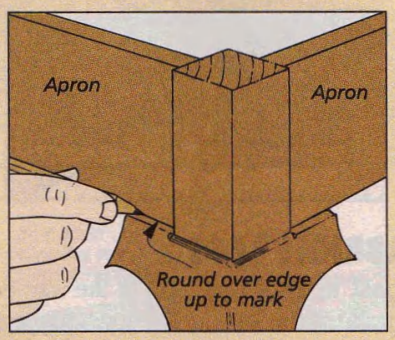

24 *Set the aprons in place and trace the front edges. Remove the aprons and round over the hard edge to the line with a chisel.*

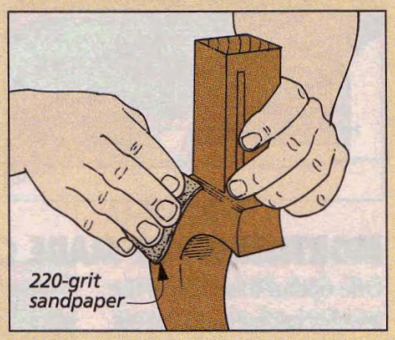

25 *Finally, sand the leg to 220 grit. If applying a liquid stain, you might want to use a wood conditioner before staining, see page 30.*

FACTORY-MADE CABRIOLE LEGS

If you want to build the projects in this issue without making the cabriole legs, we designed the projects so you can buy factory-made legs.

Of course, the design of these legs isn't exactly like ours. The critical difference is that the transition blocks are a bit different. This means you'll need to make some adjustments in the profiles of the aprons that connect the legs so the transition between the two is smooth.

Which brings up another difference. With factory-made legs, you need to drill the mortises with the leg already shaped. But the curves get in the way, so you'll have to use a special spacer block, see page 18.

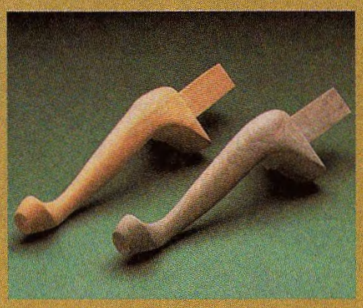

SHOP NOTES

CUTTING DENTIL MOLDING

The key to cutting dentil molding is to get the width of the "blocks" the same as the spacing *between* the blocks. You could lay them all out by hand, but there's a much easier way.

To cut the dentil molding for the plate shelf on page 32, I used a simple, shop-built jig. It's just a ¾"-thick auxiliary fence that's attached to the miter gauge on the table saw. Then a small locating pin is mortised into the bottom.

MAKING THE JIG. To make the jig, start by cutting a shallow notch in the fence that's the same width as the dentil block (in my case, ½"), see Fig. 1. The dentil blocks will end up protruding 3/16", but I cut the notch only ⅛"-deep. This way, with the pin installed, the molding will rest flat on the table saw top.

With the notch cut, make the pin so it fits snug and glue it in place, see Fig. 2.

SET UP. To set up the jig, temporarily clamp it to your miter gauge, see Fig. 2. Getting the jig positioned correctly is critical. Again, the goal is to make the blocks and the space between them the same. And this is done by making sure the distance from the pin to the dado blade is *exactly* the same as the width of the pin (½").

Then simply raise the dado blade to the correct height for the notches (in my case 3/16") and cut a second notch in the auxiliary fence, see Fig. 2a.

CUTTING DENTIL. Now to cut the molding, start by butting the end of your molding against the side of the pin and make your first pass, see Fig. 3. Place this notch over the pin and make your second pass. By repeating this sequence, all the dentil blocks can be cut.

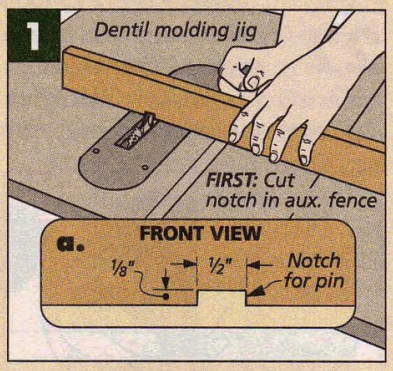

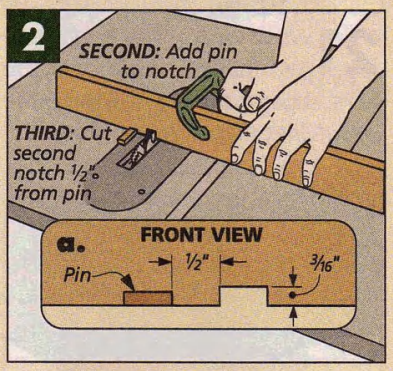

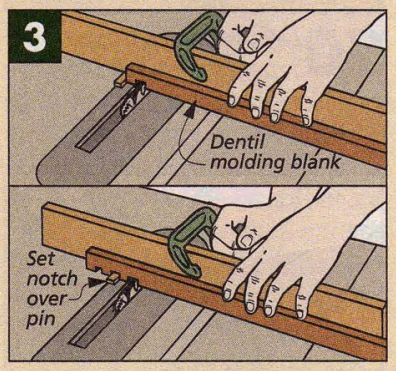

MORTISING PRE-MADE CABRIOLE LEGS

One option that makes the jewelry cabinet and the coffee table easier to build is to purchase the legs instead of making them, see photo. (For sources, see page 35.) But even pre-made legs will need mortises drilled in the corner post to hold the stretchers and rails.

The problem with drilling the mortises is the only thing square on the leg is the corner post. And when the leg is set down on the drill press, the curved edges get in the way. So to keep the leg square, I made a spacer block to set it on.

This spacer is made from two pieces of 1½"-thick stock glued together to form an L-shaped block. It holds the cabriole leg up off the table and out from the fence.

This way, the block keeps the face of the corner post square to the bit. And it also keeps the leg and fence aligned so the mortises are drilled in a straight line as the waste is removed.

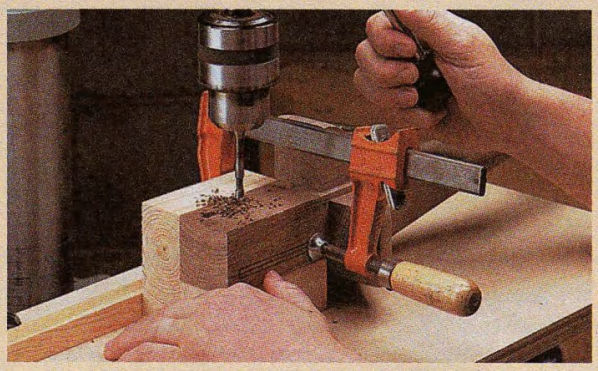

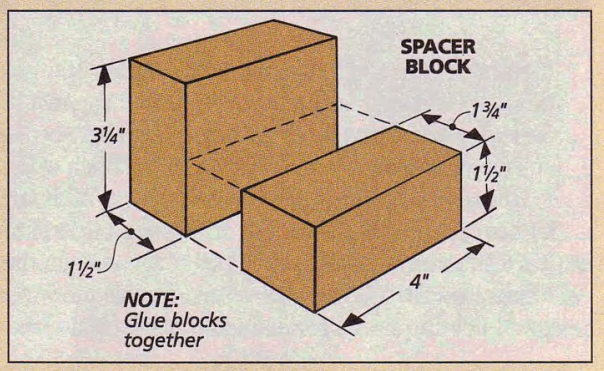

LEG CLAMPING JIG

After cutting out cabriole legs, they still need to be filed and sanded to their final shape. To do this, I needed a way to hold the leg steady, yet leave plenty of room to work around it. I solved this problem with a special clamping jig.

This jig resembles a carver's "cradle" with a headstock and tailstock attached to the pipe clamp. The jig pieces are constructed from 2x4 stock with a hole bored through each piece for the pipe, see Fig. 1.

To keep the tailstock from swiveling, I cut a kerf part way through it on the bandsaw, see Fig. 2. Then I added a carriage bolt and wing nut. Once the jaw is set where you need it, just tighten the wing nut to keep the tailstock from turning.

Keeping the headstock from moving is a little easier. Just cut a notch in one edge the same size as the jaw of the clamp.

As the clamp is tightened, both the headstock and tailstock tend to tilt back. To compensate for this, I planed a slight taper on the inside edge of each piece. Finally, I added a piece of self-adhesive sandpaper to the inside face of the jaws. It gives them a better grip on the leg.

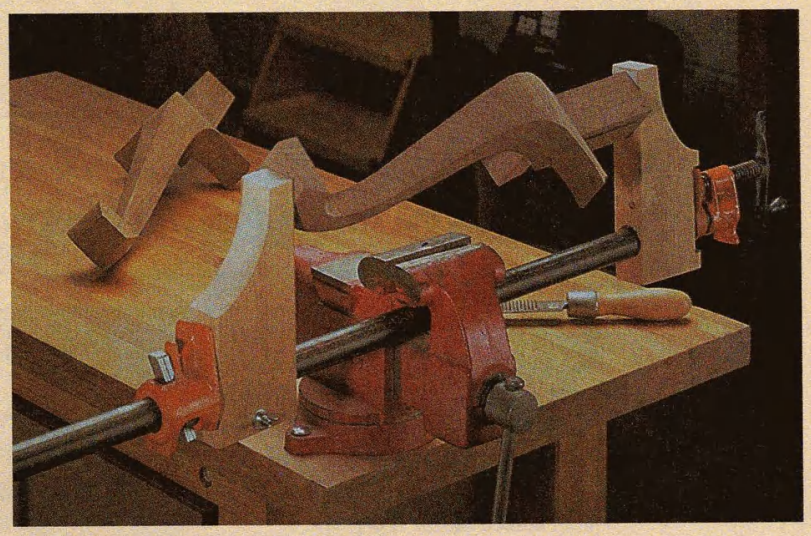

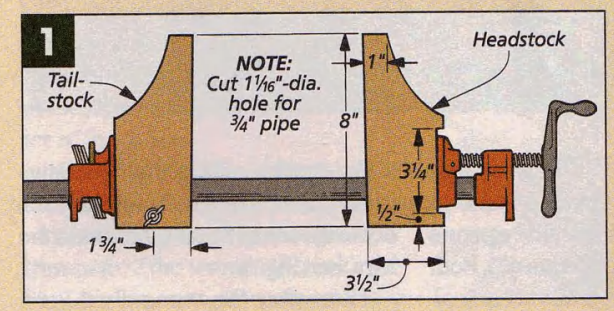

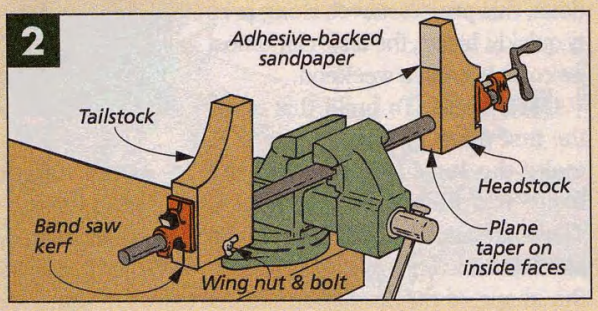

MATCHING GRAIN

To make the cove molding for the plate shelf on page 32, I laminated two 3/4"-thick pieces together. But I wanted to match the grain so these pieces still look like one thick blank.

The problem is you can't see the grain you'll be matching until after the profiles are routed. So how do you choose the boards in the first place?

The solution is to look at the end grain. First of all, make sure that the end grain on each board runs in roughly the same direction, see Fig. 1. If they don't, the joint line will be obvious, see Fig. 2.

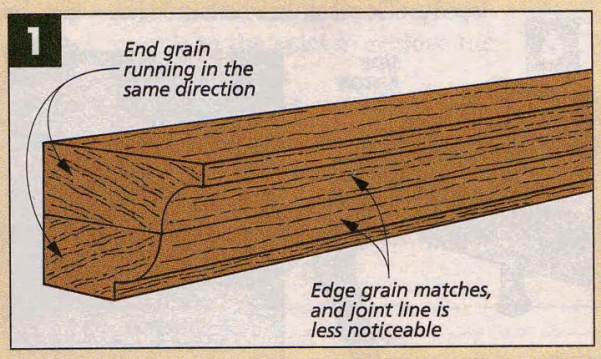

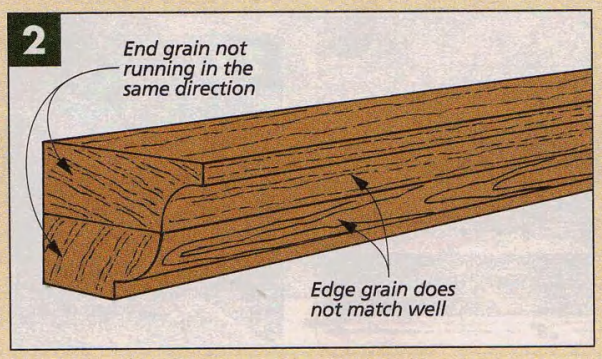

O-RINGS

To get the doors on the jewelry cabinet to fit flush, they may need to be adjusted slightly in or out.

One easy way to do this is to install a rubber O-ring behind the strike plate of the magnetic catch. This rubber ring has enough "give" so you can use it as an adjustable spacer.

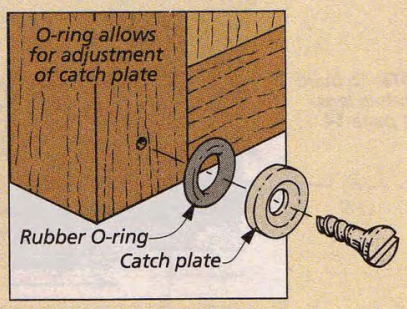

COFFEE TABLE

This coffee table features cabriole legs, scalloped aprons, and an oval top. But the straightforward construction won't throw you any curves.

This coffee table is an elegant Queen Anne project. It features cabriole legs, a scalloped base, and an oval top with a hand-rubbed finish. But don't assume that this table demands a lot of time or a lot of highly specialized skills. It doesn't.

The legs are the most involved part of this table. So to help out, we've included a step-by-step article on page 14. Or if you just can't bring yourself to build the legs, you can buy them pre-made, see page 35. With the legs done, this project moves along pretty quickly. In fact, the table can almost be completed in a weekend.

CABRIOLE LEGS. To build this table, the first thing you need to do is to make the **legs (A)**, see drawing below and the article on page 14. These are similar to the legs on the jewelry case. The only difference is the shape of the transition blocks where they join the aprons.

RAILS & STRETCHERS. When the legs are complete, the next step is to connect them with 3/4"-thick **side aprons (B)** and **front/back aprons (C)**. Both are the same width and have a scalloped profile cut on their bottom edges.

But before cutting the decorative profile, I cut the tenons on the ends of the aprons to fit the mortises in the legs, see Fig. 1.

Then after the tenons had been cut, I cut a groove on the inside faces

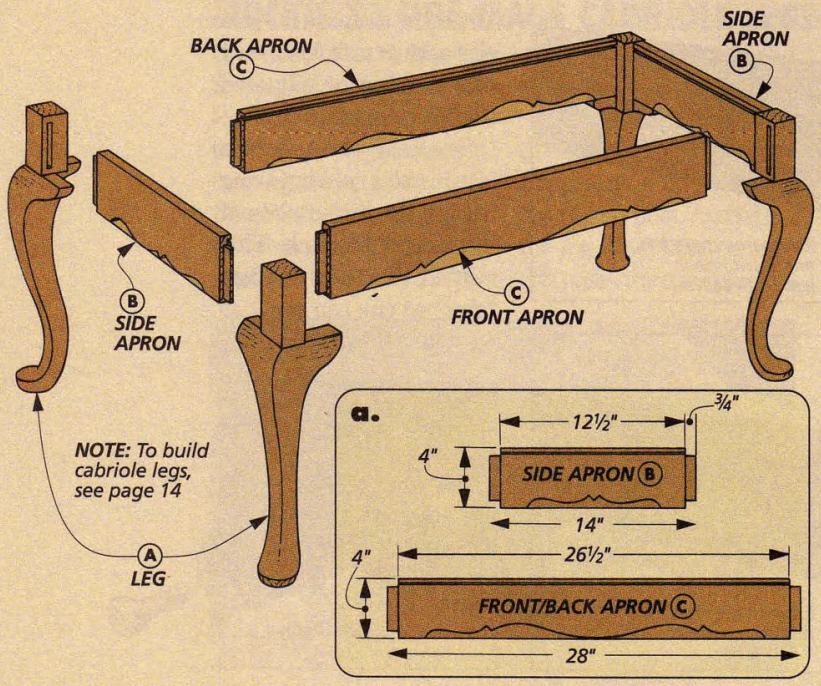

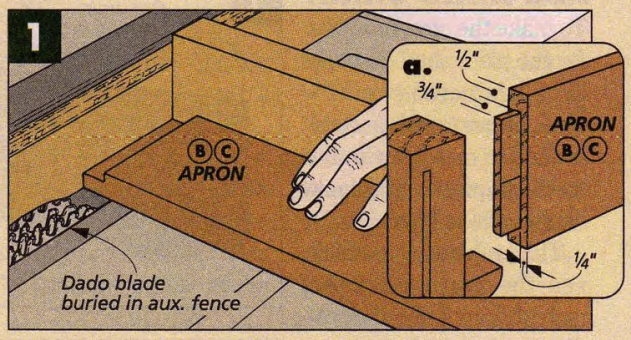

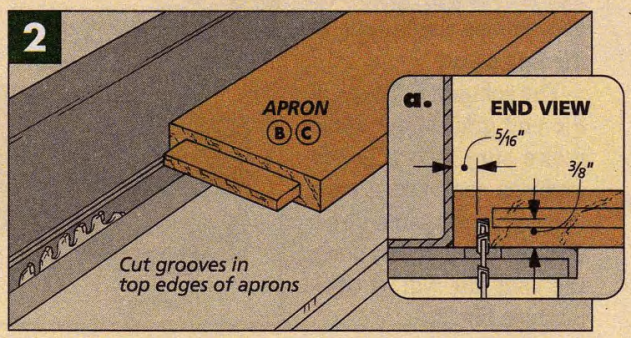

of the aprons, see Fig. 2. These grooves hold the simple Z-shaped fasteners that I used later to secure the top to the base.

SCALLOPED PROFILES. Now the aprons are ready for their decorative profiles. The nice thing is, the profile is the same on both the side aprons and the front/back aprons, so I only needed one half template for both, see below.

To create this template, you can either lay it out using the simple grid shown below. Or you can buy full-size patterns for the legs, aprons, and top, see page 35.

With the template complete, I began laying out the profile on the front apron, see Fig. 3. To do this, the base will need to be dry assembled first. That's because the curve on the template must start where the transition block on the cabriole leg ends, see Fig. 3a. (It's also important to keep the top edge of the template flush with the top of the apron.)

Draw the profile; then flip the template over and draw it again, starting from the other end. The half template meets in a shallow curve at the center of the apron.

The profile on the side aprons is the same as the front/back aprons —just shorter, see Fig. 4. So I simply trimmed off the template. As with the front/back aprons, the curve starts at the transition block, so you may need to adjust the centerpoint of the profile.

After the profiles are laid out, the scalloped edges can be cut. The important thing here is to get a clean, sharp corner at the "point" of the profile. To do this, I started by cutting the point of each profile, see Fig. 5a. Then I cut from the ends along the curves to the point to remove the waste, see Fig. 5.

Finally, I glued and clamped the base together. Then I sanded the scalloped edges smooth, making sure the joint lines between the transition blocks on the legs and the aprons were flush, see Fig. 6.

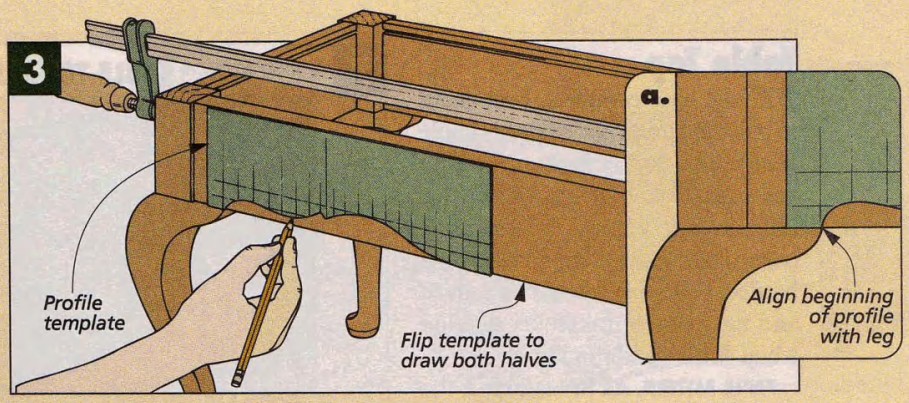

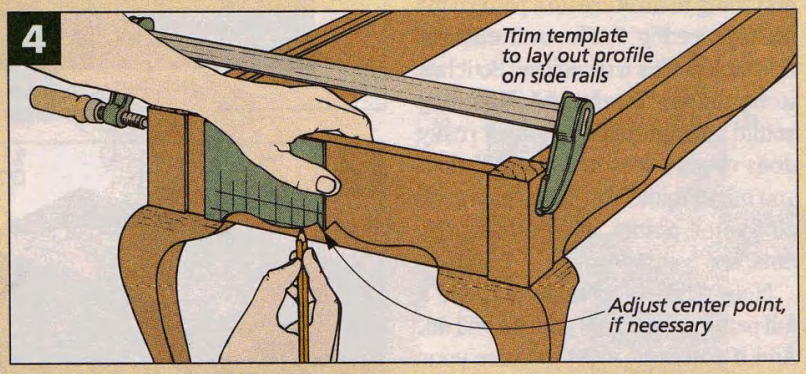

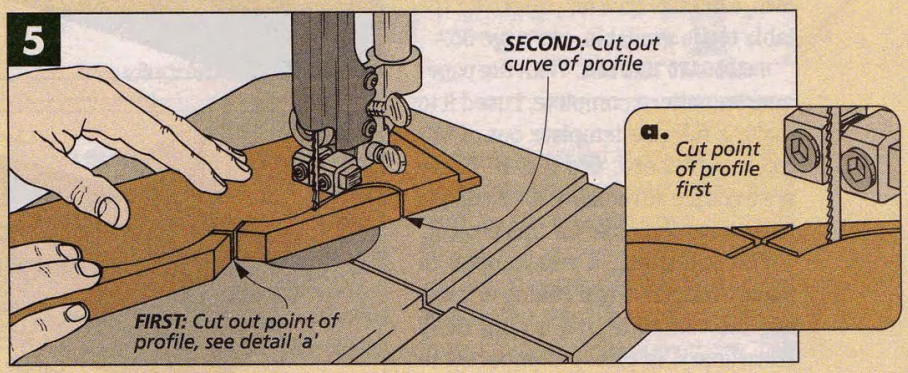

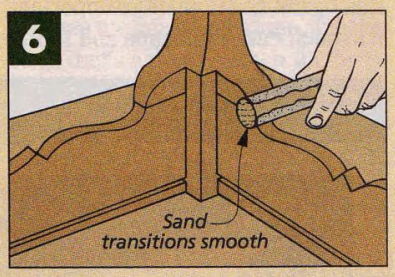

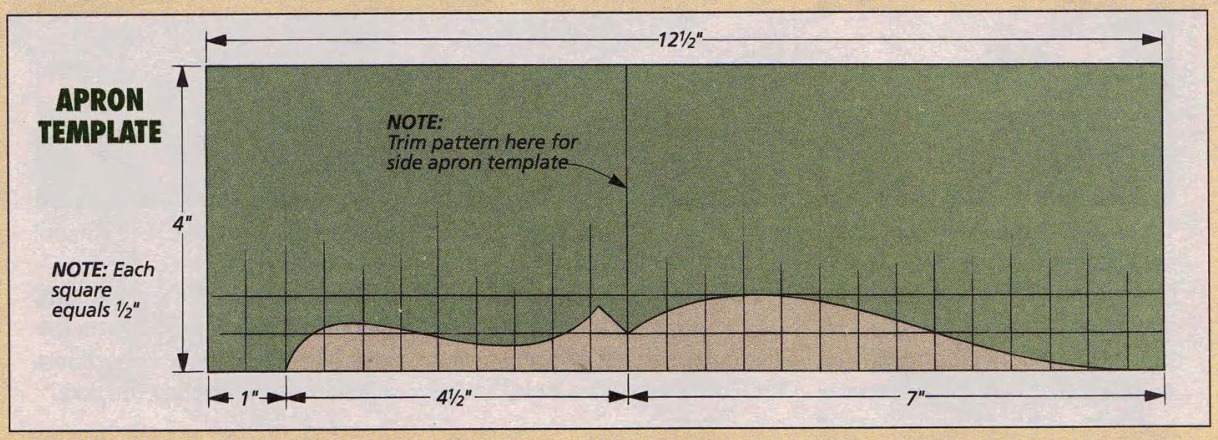

Table Top

With the base complete, I set about to build the top. This is pretty simple really. The top is just a glued-up mahogany panel cut in an oval shape.

To do this, I began by making a paper pattern first. Then I created a hardboard template from this pattern and used the template as a guide when cutting and routing.

PAPER PATTERN. As I mentioned, the first thing to do is create a pattern for the top, see Fig. 7. The oval shape of this table isn't a true ellipse. So it has to be drawn "freehand." This may sound a bit intimidating, but it really does require less artistic skill than you might think. You just draw a grid, plot some points, and connect the dots, see box below.

Note: There's no need to make a full pattern; a quarter pattern will do. And if you don't want to make your own, a full-size quarter pattern for the table top is available, see page 35.

HARDBOARD TEMPLATE. With the paper quarter pattern complete, I used it to make a full-size template out of ¼"-thick hardboard, see Fig. 8. There are a couple advantages to creating a hardboard template for this project.

For one thing, if you happen to make a mistake when cutting or sanding the template, it's no big deal. Hardboard is cheap compared to mahogany. But even more important, it's much easier to shape and sand a

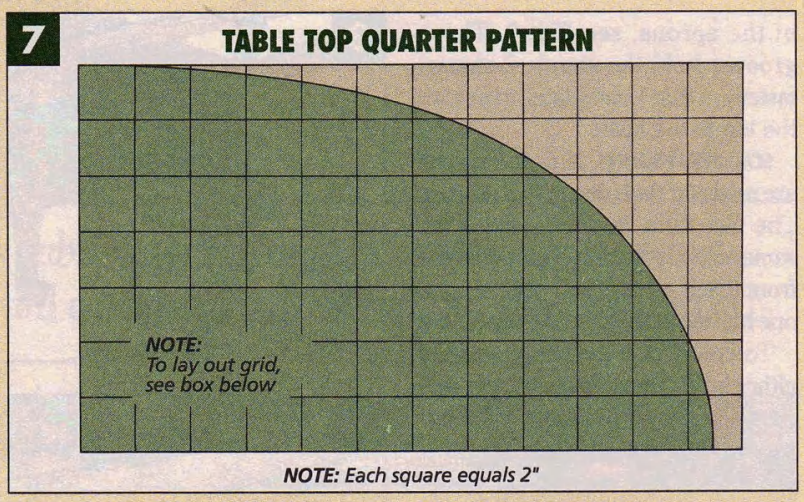

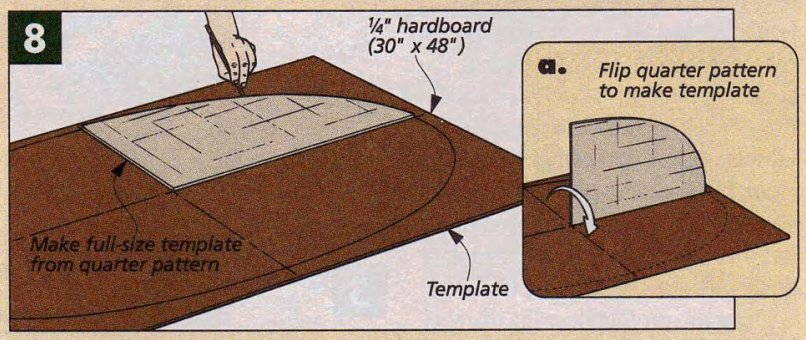

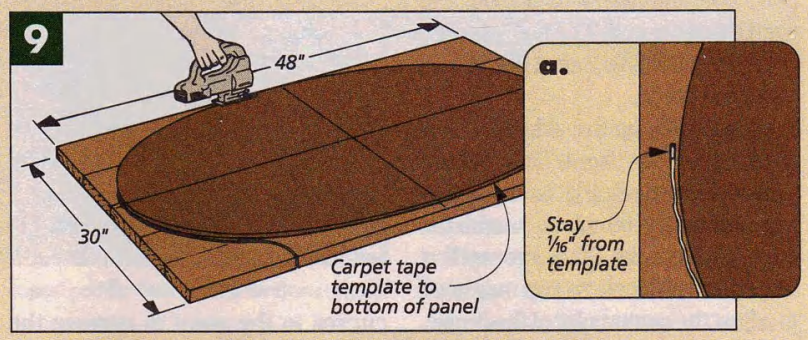

QUICK AND EASY GRID

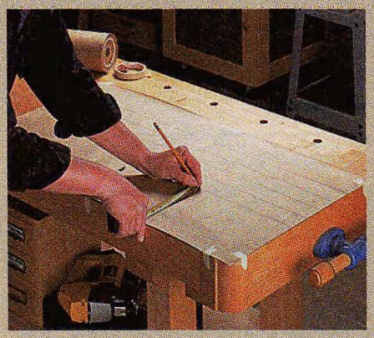

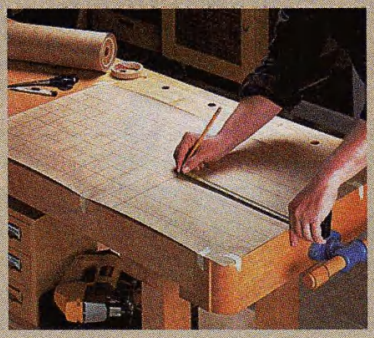

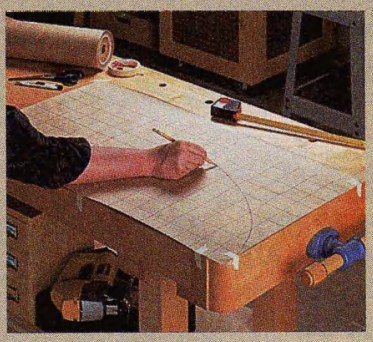

I'm not an artist and don't feel comfortable drawing freehand curves. But recently, I was shown a quick way to draw freehand curves by first creating a rough grid. All you need is some paper for the pattern, a pencil and a tape measure, and a table with a square corner.

GRID. To do this, I made a 2" grid using a trick I'd been taught by a carpenter, see left and center photos. To draw the lines, hold the tape firmly with one hand and "hook" the pencil on the end of the tape.

CONNECT DOTS. With the grid drawn, plot the points of the curve on the grid. Now, drawing the curve is just a matter of "connecting the dots."

¼"-thick hardboard template than a panel made from ¾"-thick solid wood.

Plus, I was able to use the template to guide the router bit as I shaped the edge, refer to Figs. 10 and 11.

To make the template, I started by cutting an oversize blank and drawing centerlines on the top to create "cross hairs," see Fig. 8. (The blank was 30" x 48".) Next, I drew the pattern on the blank, flipping it around the centerlines from the quarter section until the layout was complete, see Fig. 8a.

When cutting out the hardboard template, I used a sabre saw with a fine tooth blade, staying 1/16" from the layout line. Then I sanded the template up to the line.

OVERSIZE PANEL. Now that the template is complete, the next step is to glue up a ¾"-thick blank for the top. This blank starts out the same size as the template blank (30" x 48").

When the glue is dry, remove any excess glue and plane and sand the panel flat. Then carpet tape the hardboard template to the bottom face of the panel, see Fig. 9.

Like the template, I rough cut the panel with the sabre saw. But this time to get the panel flush with the template, I used a flush trim bit in the router, see Figs. 10 and 10a.

However, when routing the edge of the table top, you're likely to run into some chipout. The solution is to backrout the edge, see page 29.

Next, I routed a profile along the top edge of the table, see Figs. 11 and 11a. (This requires the same procedure as the flush trim routing.) There are a number of profile bits you can use. I chose a special Freud bit designed especially for table top edges. (For sources, see page 35.)

Note: This bit didn't fit the opening on my router base, so I replaced it with an auxiliary base, see Fig. 11.

Once the profile was complete, I hand sanded the bottom lightly to remove the sharp edge, see Fig. 11b.

Before attaching the table top to the base, I applied the finish. First, I put a coat of stain on everything. (For more on staining end grain, see page 30.) Then I applied a couple coats of varnish. It's a good idea to add a third coat to the top. This way, there's a thicker film of finish so you can "rub out" the finish to a high gloss.

When the finishing is done, the one thing that's left is to attach the table top to the base with Z-shaped fasteners, see drawing below. W

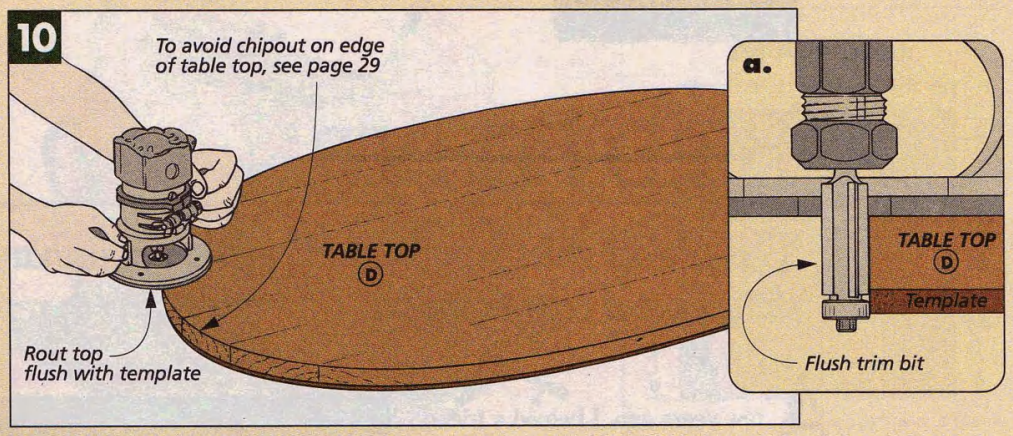

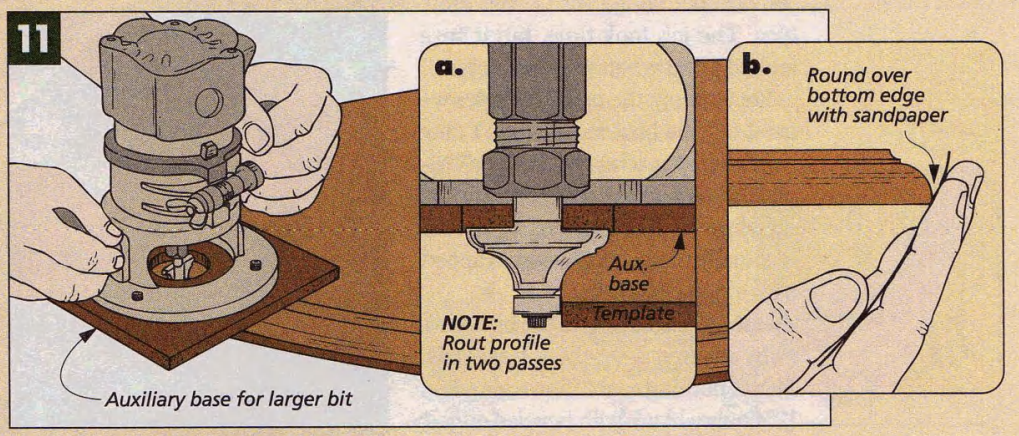

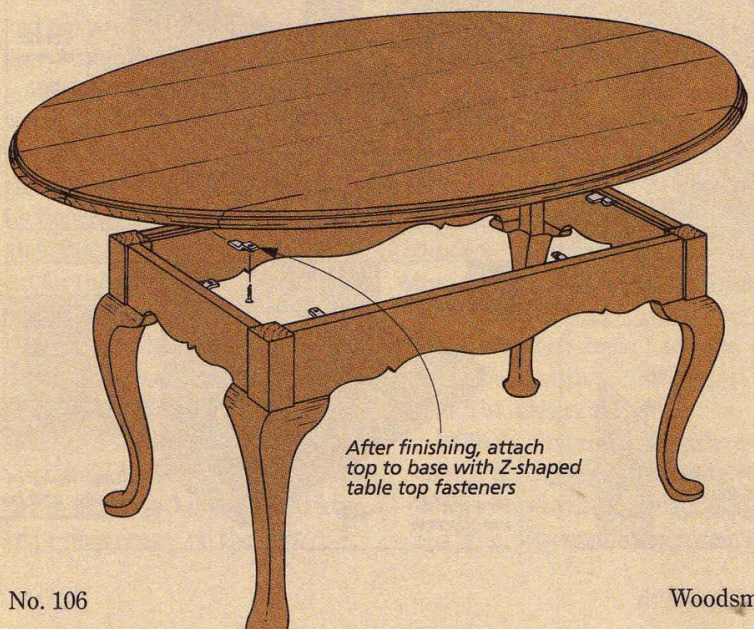

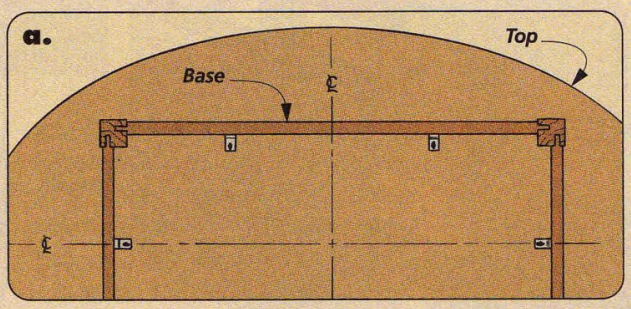

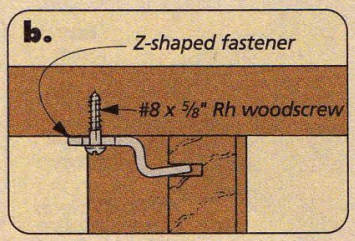

BIRD FEEDER

This project gives you the chance to try your hand at installing cedar shingles and copper roofing without having to remodel your house.

A few years ago, I helped a friend side his house with cedar shingles. The job took time, but it sure looked great when we were done.

Fortunately, the cedar shingles we used on this bird feeder didn't take nearly as long to apply. And the copper roof doesn't require any special metalworking equipment. (The roof is actually made of plywood wrapped with a thin copper foil.)

BASE. I began work on the bird feeder by making a 3/4"-thick **base (A)**. This is nothing more than a glued-up 12"-square blank with beveled edges, see drawing below.

Note: Since the feeder is going to be exposed to the weather, I used two types of water-resistant glue for assembly. (Here, I used Titebond II. Epoxy will also get used later.)

After cutting the base to size, the next step is to drill a 1 1/8"-diameter hole in the center for a support pipe. While I was at it, I also drilled the shank holes for attaching the center divider which is added next.

CENTER DIVIDER. The center divider separates the feeder into two sections and provides a way to attach the sides. The divider consists of a **top/bottom (B)** and two **ends (C)** sandwiched between two **sides (D)**.

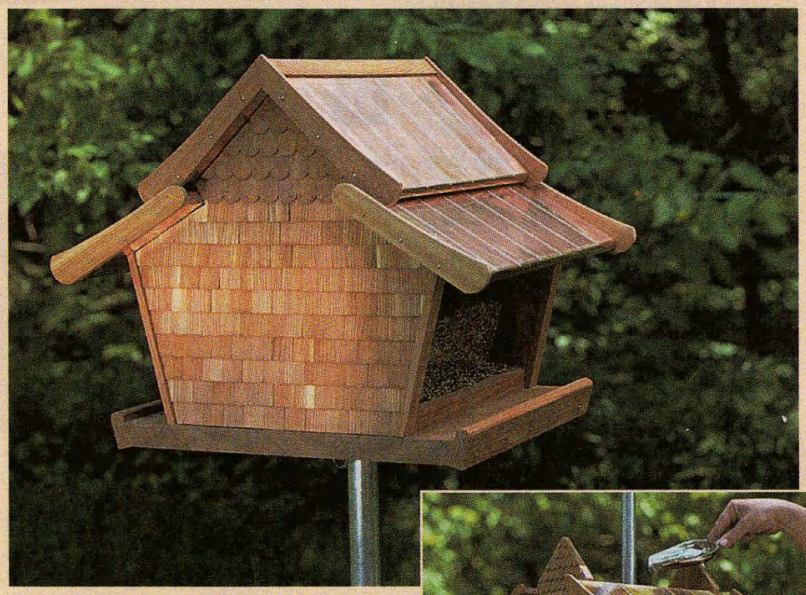

▲ *To make it easy to fill, the feeder is designed to be lowered down to a convenient height.*

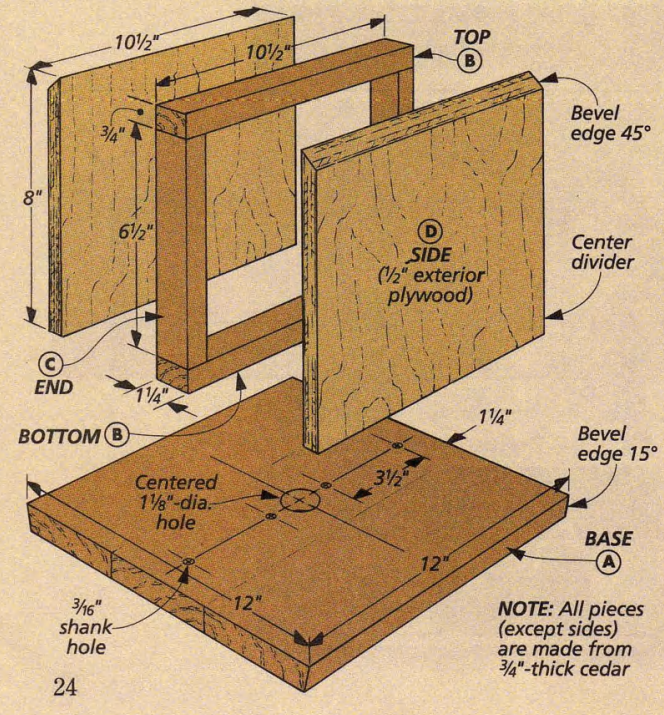

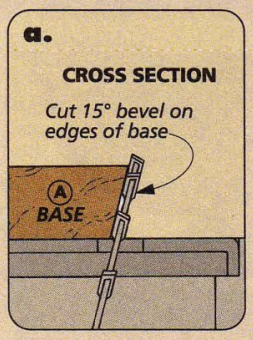

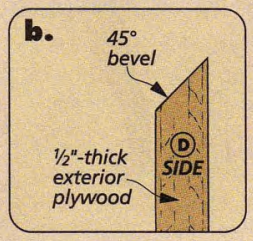

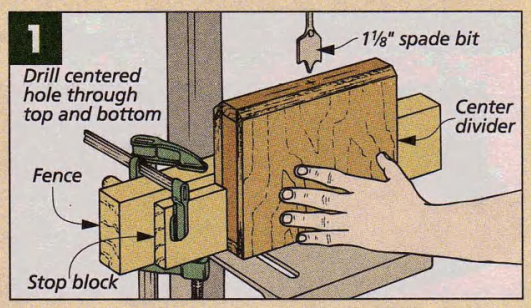

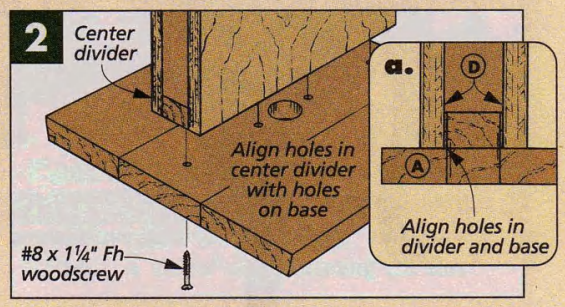

Here again I used cedar, but only for the top, bottom, and ends. For the sides I used ½" *exterior* grade plywood. And to make it easier to fill the feeder, I beveled the top edges, see drawing below left.

After gluing the center divider together, the next step is to drill a centered hole for the support pipe, see Fig. 1. The only problem is the drill bit isn't long enough to go all the way through. So the hole has to be drilled from both ends. To do this, I set up a fence and stop block on the drill press.

DIVIDER INSTALLATION. After the holes have been drilled, the divider can be screwed to the base. Just be sure the divider is positioned square on the base *and* the holes in the divider and base align, see Figs. 2 and 2a.

END PIECES. After attaching the divider to the base, work can begin on the end pieces. I started by cutting a plywood blank for each **end piece (E)**, see detail 'a' in drawing above. Then I laid out the shape and cut it to size on the band saw (or you could use a sabre saw). But before the end pieces can be attached to the divider, there are a couple of things to do.

First, two shallow grooves are cut on the inside face of each end piece, see drawing above and Fig. 3. These grooves will be used to hold the ⅛"-thick Plexiglas panels that create each food compartment.

Second, to hold the panels at the correct height for the seed to flow out, I glued 1"-long spacers at the bottom of each groove, see Fig. 3b.

Once the spacers are in, center the end pieces (E) on the base (A) and screw them in place.

SHINGLES. After attaching the end pieces, I added the shingles. I used two different styles of cedar doll house shingles for this project. The lower section has typical square-cut shingles. But I wanted something different for the gable area, so here I used fish scale (half-round) shingles, refer to Fig. 5. (For sources, see page 35.)

Since the sides of the feeder are angled, I couldn't use the edge of the sides as a vertical reference point to start the shingles. So I decided to lay the shingles working outward from a centerline drawn on the end.

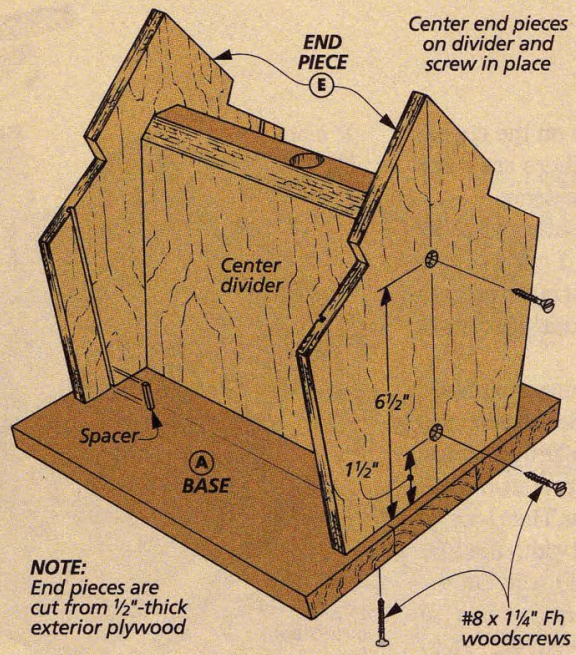

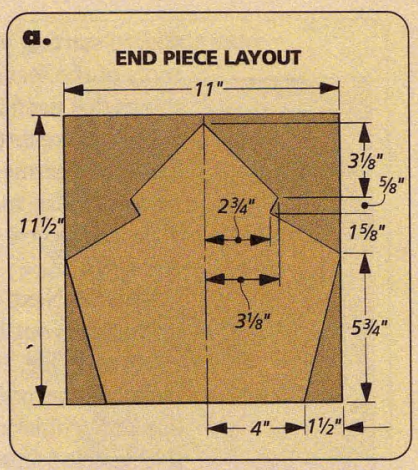

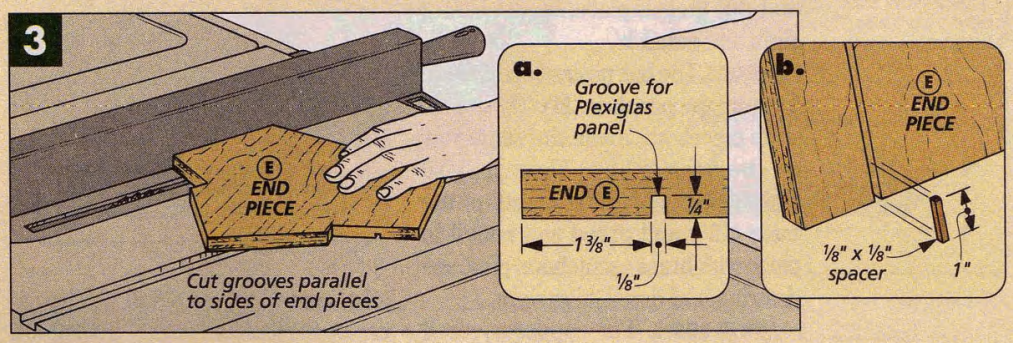

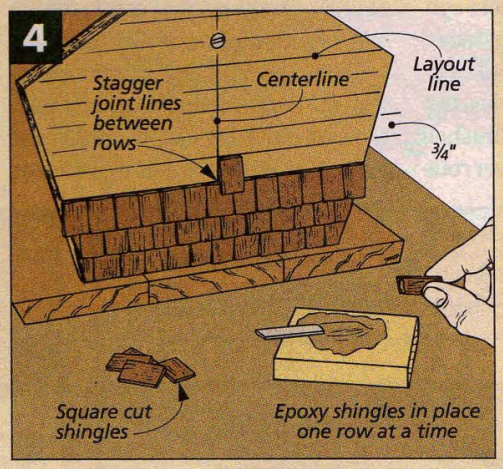

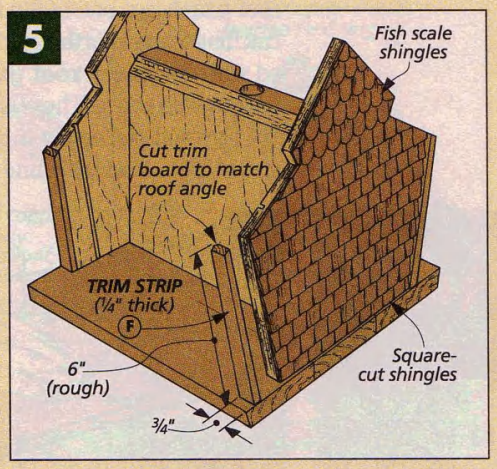

With the centerline drawn, the bottom course (row) of shingles can be glued in place. Note: Because of its gap-filling abilities and strength, I used quick-set (5-minute) epoxy to attach the shingles. Also, I found it easiest to let the end shingles hang over the edge, and then come back and trim them flush with a utility knife, see photo in margin at right.

With the first course complete, you can lay an overlapping second course. Work your way up the side one course at a time, overlapping each course as you go. There are just a couple of hints to follow. First, draw layout lines to help you maintain a ¾" spacing from the bottom of one course to the bottom of the next, see Fig. 4.

Second, the shingles look best if they're staggered between courses. To do this, simply shift each course half a shingle's width to the left or right of the course immediately below it.

TRIM STRIPS. Finally, to cover the exposed edges of the sides, I attached ¼"-thick **trim strips (F)**, using a water-resistant glue, see Fig. 5.

▲ *As each row is applied, use a utility knife to trim the overhanging shingle flush.*

Before starting work on the copper roofs of the feeder, there are a few things that need to be done.

First, to create the outer wall of the food compartments, I cut a couple pieces of Plexiglas to fit in the grooves in the end pieces, see drawing at right and detail 'b'.

SEED STOP. Next, to prevent birdseed from spilling out, I added a **seed stop (G)** to each side. To make these stops, I rounded over one edge of an oversize blank of ½"-thick cedar. Then I ripped the blank to a finished width (height) of ¾", see detail 'b'. Finally, cut the seed stops to fit between the ends (E) of the feeder (mine were 10½"-long) and glue them in place, see drawing at right and detail 'b'.

PERCHES. The last pieces to add to the base are the **perches (H).** These 1¼"-wide pieces are made the same way as the seed stops. Then they're trimmed to match the length of the base (12") and glued and nailed in place with brass escutcheon pins, see drawing and detail 'b' at right.

LOWER ROOFS. The copper covered roof panels are one of the most eye-catching features of this feeder. I started with the **lower roof panels (I),** see drawing above. These are just two ½" plywood pieces cut to a finished size of 5" x 14" with a roundover routed on one edge, see detail 'a'. Then to create the look of "seams" in the roof, I cut six evenly-spaced kerfs in the top side of each piece, see Figs. 6 and 6a.

Next, I used a pair of scissors to trim the copper foil ¼" longer (14¼") than the roof panels. To attach the foil to the roof, I used a spray adhesive, applying two coats to both surfaces. I wrapped the copper around the roof, starting at the top edge and tacking the foil in place with copper tacks, see Figs. 7 and 7a. Then, trim any excess and fold over the ends, see Fig. 7b.

To make the "seams," lightly press the copper into the kerfs with a dowel,

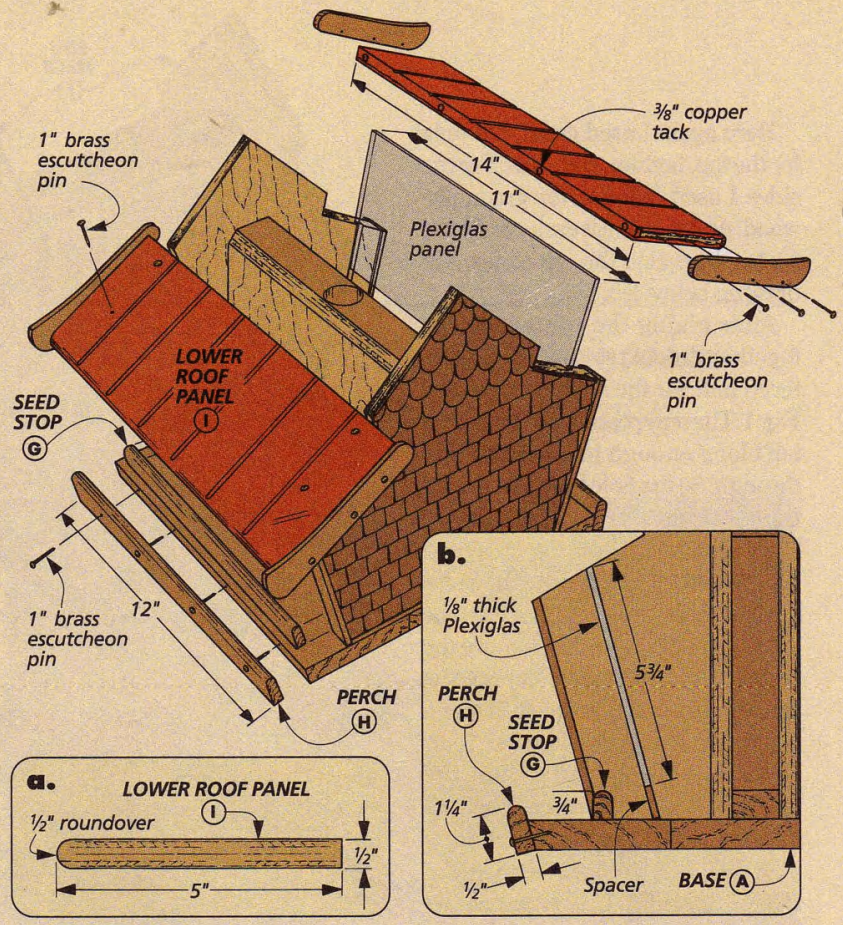

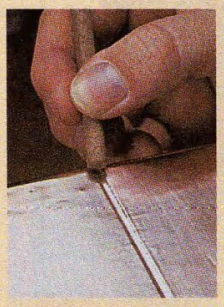

▲ *A dowel is used for forming the "seams" on the roof pieces.*

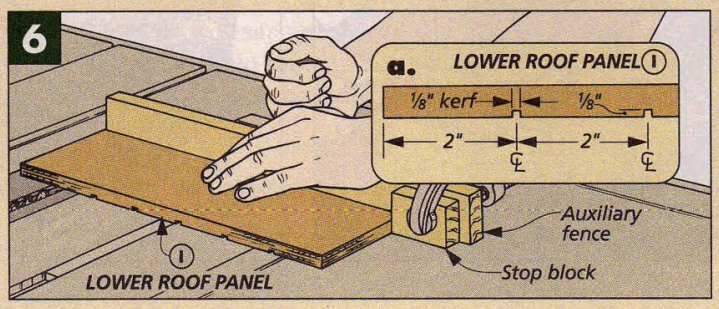

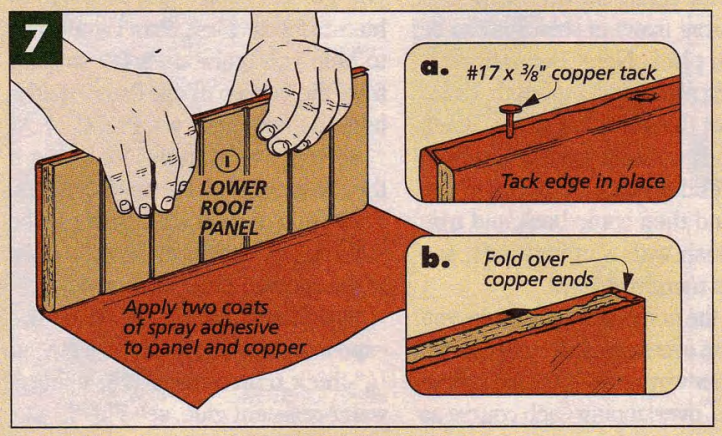

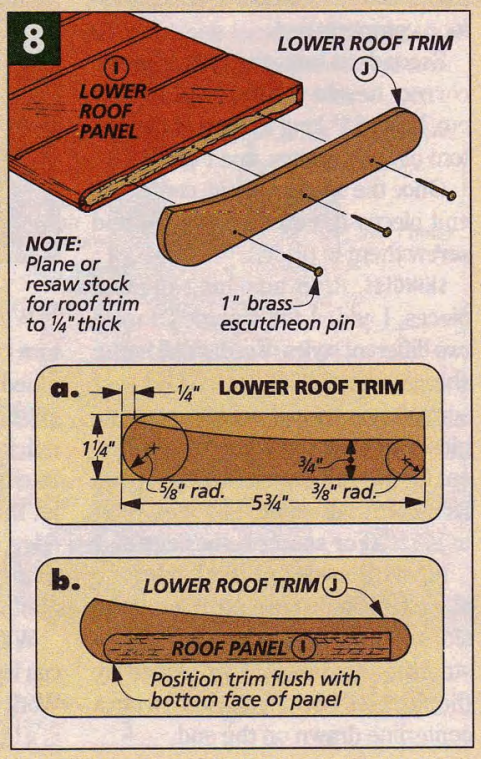

see photo tip in margin on page 26.

LOWER ROOF TRIM. To complete the panels, I added **lower roof trim (J)**, see Fig. 8. I laid out and cut these pieces from 1/4"-thick cedar. Then they're attached to the panels with epoxy and escutcheon pins.

Once the lower panels are complete, they're centered over the ends of the feeder and nailed in place.

UPPER ROOF. Like the lower roof, the upper roof is made up of two plywood panels. But this time, these pieces are glued together to form an L-shaped assembly. To do this, I started by cutting the **upper roof panels (K)** to finished size (5 7/8" x 13") with a 45° bevel on the top edge, see drawing and detail 'b' at right. Then I routed a roundover along the other edge.

Note: The outer kerfs on the upper panels are spaced slightly different than those on the lower panels, see detail 'a'. Once the kerfs are cut, the two sections can be glued together.

COPPER. As with the lower roof, trim the copper so that it's 1/4" longer (13 1/4") than the upper roof panels. After applying the spray adhesive, I wrapped the upper roof, starting at the peak on the underside of the roof. Wrap the first sheet of copper around one side until it overlaps the peak, see Fig. 9a. Then, use a second piece to wrap the opposite side of the roof. Now tack the edge of the copper in place, see Fig. 9. Finally, use a dowel to press the decorative kerfs into the copper.

UPPER ROOF TRIM. The next step is to attach the **upper roof trim (L)**, see Fig. 10. These pieces are constructed the same as those on the lower roofs except one end of each is mitered, see Fig. 10a. Then they're nailed and epoxied to the ends of the roof.

ROOF CAP. To cover the tacks, I made a **roof cap (M)**. It's a single 3/4"-thick piece cut in an L-shape, see Fig. 10.

To do this, first use a table saw and dado blade to make a 5/8"-wide by 5/8"-deep rabbet on one edge of an oversized blank, see Fig. 10b. Then using a combination blade, rip the roof cap free, see Fig. 10c. Now cut it to match the length of the roof ridge (13") and epoxy it in place.

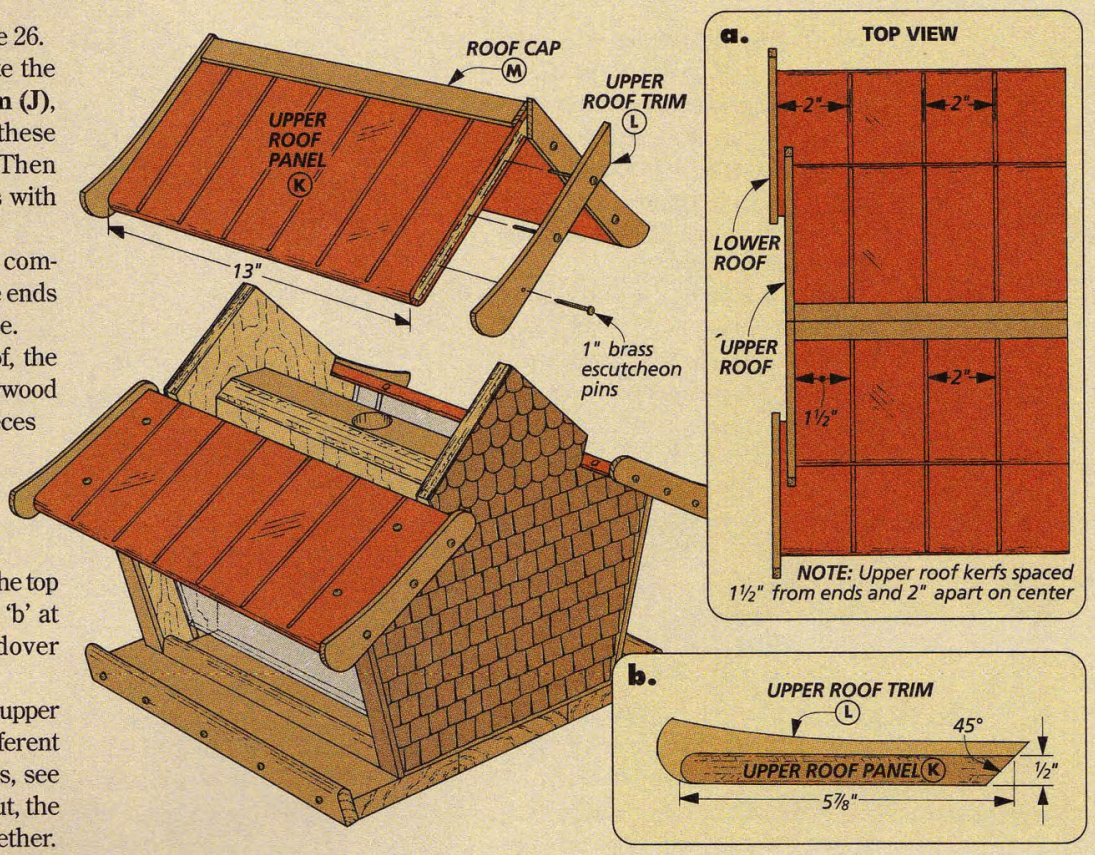

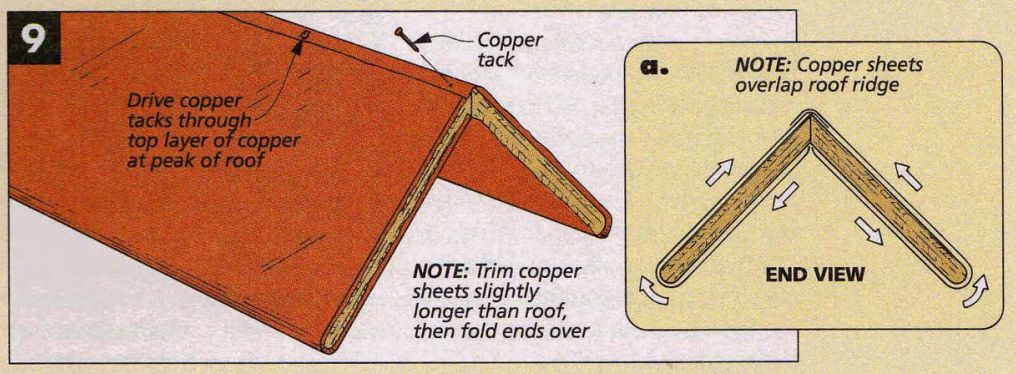

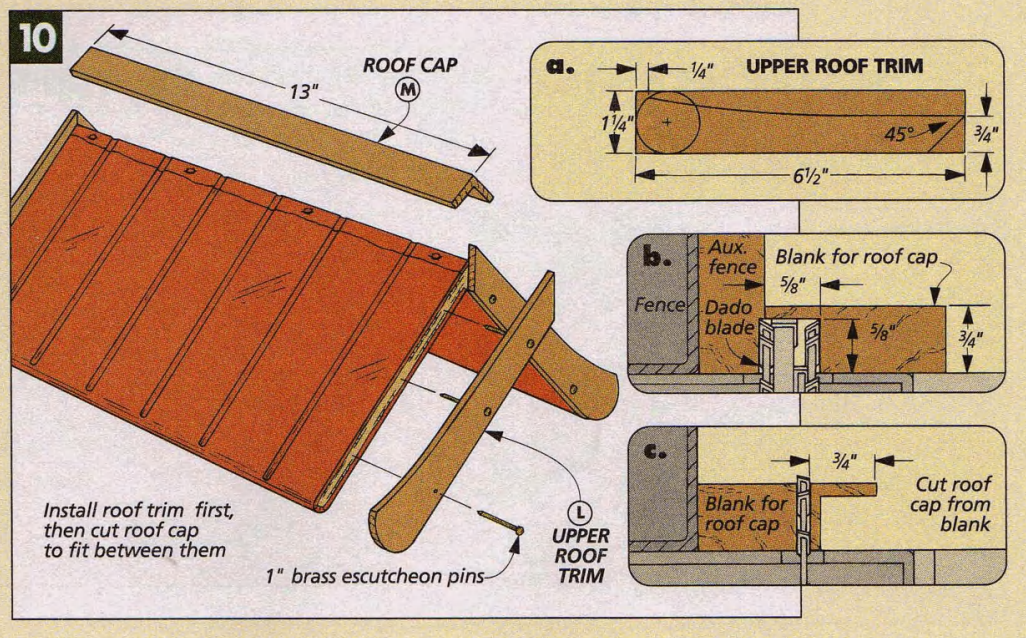

To refill this bird feeder, you don't remove the roof, as you might expect. Instead, the upper roof is mounted to the top of a support pipe that passes through the hole in the base of the feeder. When it's time to add more birdseed, all you have to do is drop the base of the feeder.

ROOF BLOCK. To attach the upper roof to the end of the pole, I made a **roof block (N).** This is just two 3/4"-thick pieces of cedar glued together and beveled on the edges to fit under the roof, see detail 'b'.

Then I screwed a pipe flange to the bottom of the roof block. This flange allows the roof to be screwed to the threaded end of the support pole.

Before attaching the roof block underneath the roof, I removed a portion of the copper foil with a utility knife, see detail 'b'. Then I glued the block to the roof with epoxy, making sure that the block was centered.

SUPPORT POLE. To assemble the feeder, simply slip a piece of pipe through the hole in the base of the feeder. (I used a 6'-long, 3/4" I.D. galvanized pipe.) Then screw the pipe into the flange on the upper roof. Note: Ask to have the pipe threaded at both ends when you purchase it.

The feeder itself is held up with a washer and removable locking pin inserted through a hole drilled in the pipe. To locate the position for drilling the hole, hold the feeder up against the roof, see detail 'a'. A second hole drilled below the first allows you to reposition the pin and drop the feeder down to refill it with birdseed.

To mount the pole, I screwed a second pipe flange onto the end of a short, pressure-treated post. I mounted the post in a hole with ready-mix concrete, and then screwed the pole into the flange, see drawing.

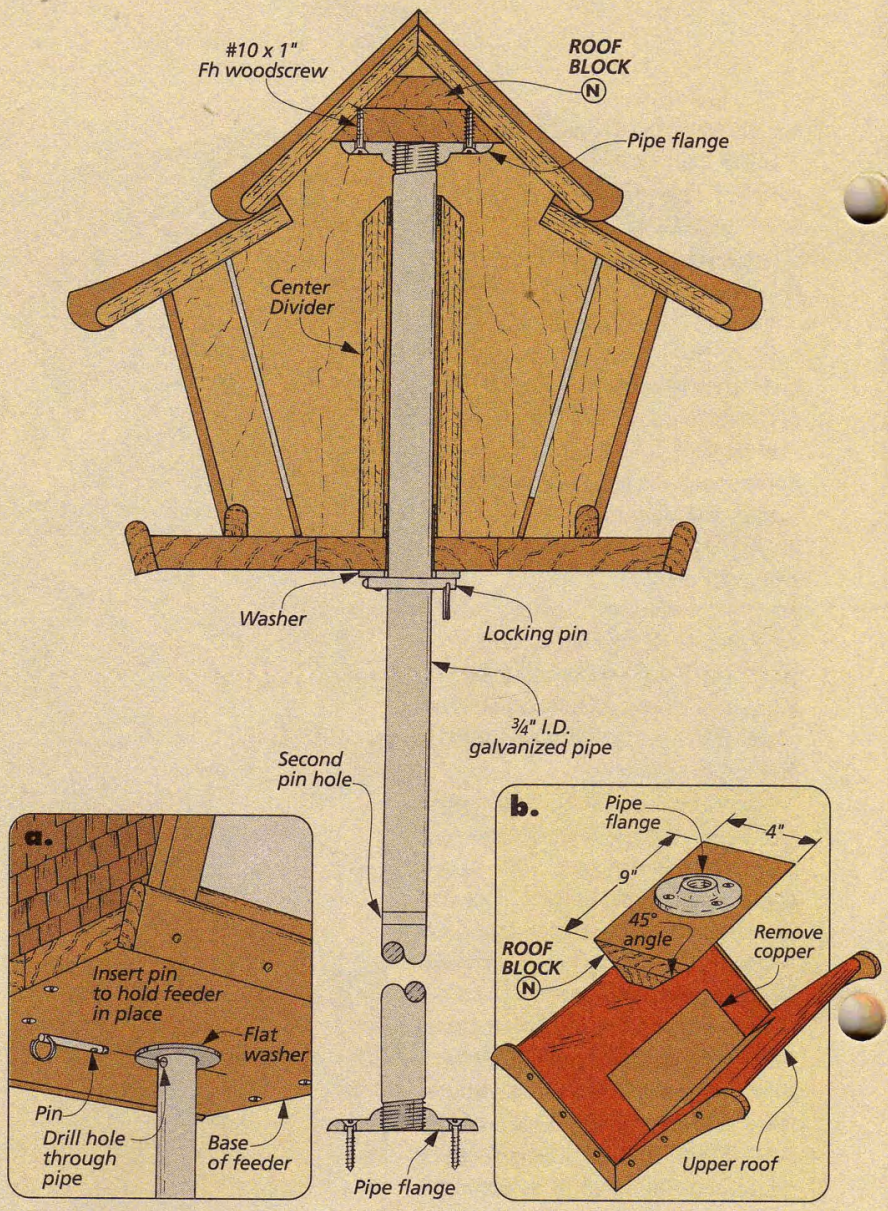

MATERIALS LIST

A	Base (1)	3/4 x 12 - 12
B	Divider Top/Bottom (2)	3/4 x 1 1/4 - 10 1/2
C	Divider Ends (2)	3/4 x 1 1/4 - 6 1/2
D	Divider Sides (2)	1/2 ply. - 8 x 10 1/2
E	Ends (2)	1/2 ply. - 11 x 11 1/2
F	Trim Strips (4)	1/4 x 3/4 - 6 rough
G	Seed Stops (2)	1/2 x 3/4 - 10 1/2
H	Perches (2)	1/2 x 1 1/4 - 12
I	Lower Roof Panels (2)	1/2 ply. - 5 x 14
J	Lower Roof Trim (4)	1/4 x 1 1/4 - 5 3/4
K	Upper Roof Panels (2)	1/2 ply. - 5 7/8 x 13
L	Upper Roof Trim (4)	1/4 x 1 1/4 - 6 1/2
M	Roof Cap (1)	3/4 x 3/4 - 13
N	Roof Block (1)	1 1/2 x 4 - 9

CUTTING DIAGRAM

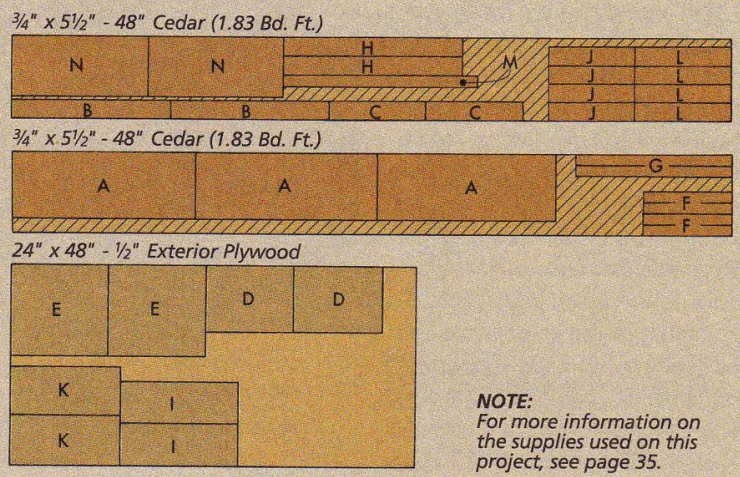

NOTE:
For more information on the supplies used on this project, see page 35.

TALKING SHOP

Backrouting

One of the cardinal rules of routing is that you should always move the router (or the workpiece) so that the stock is fed into the cutting edge of the bit. There's a good reason for this.

DIRECTION. When routing in the normal direction (moving the router left to right), you're pushing the cutting edge of the bit into the wood (or vice versa on a router table). This gives you a lot more control over the cutting action. As soon as you stop pushing, the bit stops cutting.

If you rout in the opposite direction (backrouting), the feed direction is the same as the direction the bit is rotating. So the bit pulls itself forward as it digs into the workpiece.

On a router table, this can be disastrous. The router can actually pull the workpiece (and your fingers) right into the router bit. For this reason, I avoid backrouting on a router table.

Backrouting with a handheld router is another story. Since the workpiece is clamped down to a bench, the bit tends to pull the router forward (instead of the workpiece). This makes it difficult to control the router. But you don't have to worry about your fingers coming into contact with the bit like you do on a router table.

So even though it's a little tricky, there are times when I backrout to get better results. Take the top of the coffee table shown on page 20, for example.

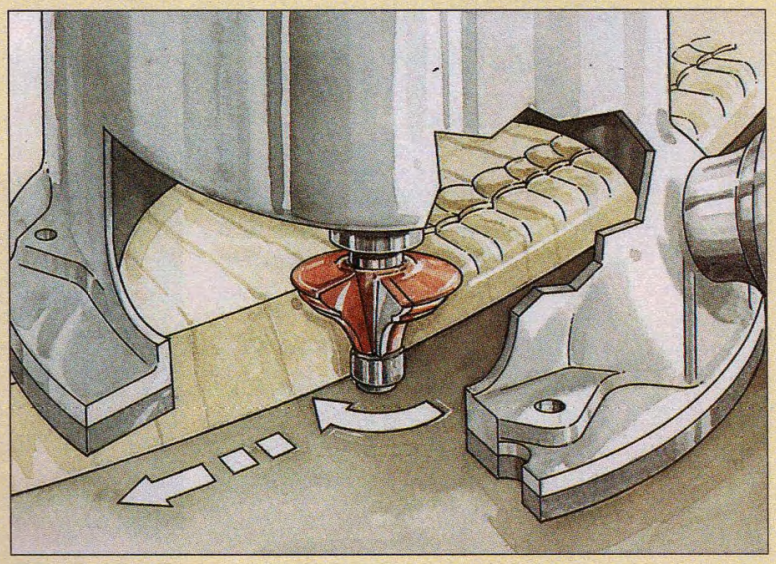

END GRAIN. Because of the oval shape of the top, it's impossible to avoid routing across end grain. In this case, if you rout around the top in the normal direction, you run the risk of ripping out large splinters of wood as you push the router bit past the end grain, see Fig. 1.

But by backrouting the top, the router bit pulls itself into the grain rather than pushing against it, see Fig. 2. So I was able to backrout around the entire edge of the top without any tearout.

But even with a handheld router, backrouting can be risky. So I usually like to take a few extra safety precautions.

SAFETY. First, I always maintain a firm grip on the router in case it kicks back. And I clamp the workpiece down to my bench so that it doesn't shift or go flying off.

Start off by practicing on some scrap pieces of wood to get a feel for how the router reacts. At first, the router will feel like a dog on a leash that's just spotted a cat. It will have a tendency to kick back from the workpiece and to skid along the edge.

But keeping your elbows tucked into your body and your arms and wrists locked in place should give you a little more control.

Finally, I take several very light cuts when backrouting instead of trying to make the cut in a single deep pass. Then, after I've removed all the material, I make a final pass with the router in the normal direction. This removes any chatter marks left behind by the backrouting. W

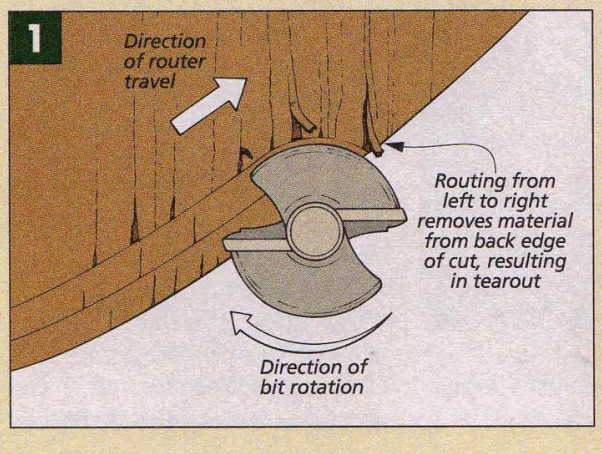

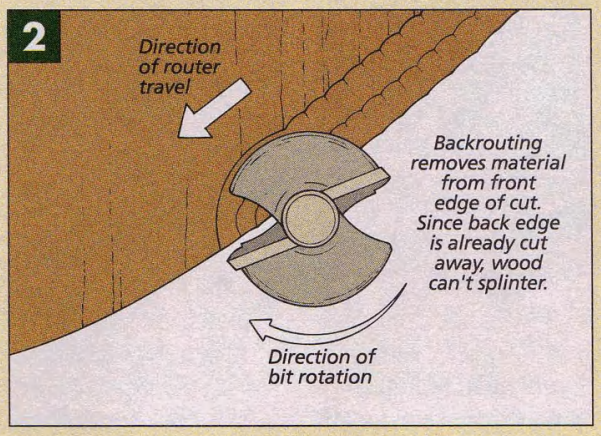

STAINING END GRAIN

When finishing a project, end grain can create some unique problems. Here are some quick solutions we've come up with in our shop.

There's one finishing problem that doesn't get a whole a lot of attention: end grain. Often after staining, the end grain will look much darker than the face grain.

Maybe the reason why this problem doesn't get much attention is that woodworkers have just learned to "live with it." Still, there are a few steps you can take that will prevent this from happening. But it helps to know why it happens in the first place.

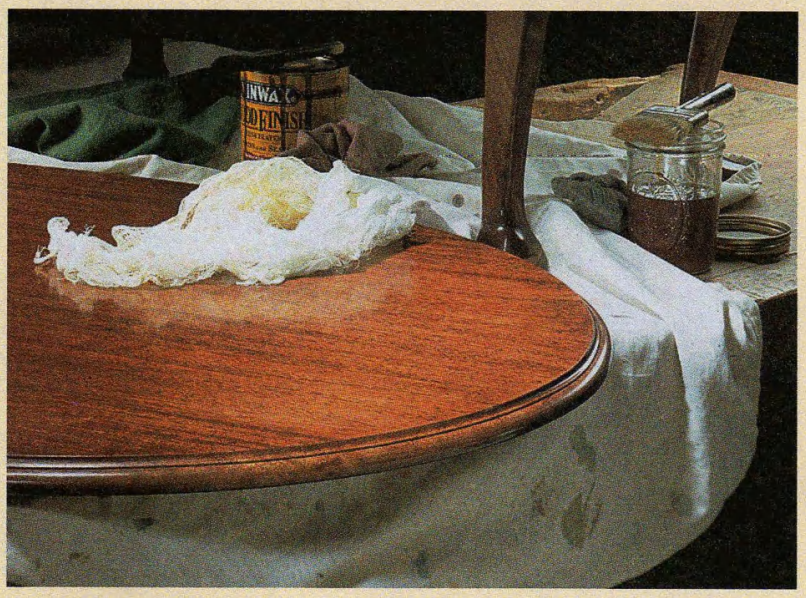

OPEN PORES. End grain naturally looks a little different than face grain. But it also acts differently too. The reason for this is simple. The end of a board is made up of open pores that work like a bunch of straws. Whatever is put on the surface of the board won't penetrate very quickly. But any liquid substance (like glue or stain) applied to the open ends will be pulled deep into the wood.

STAINING END GRAIN. Applying a stain creates a real problem for end grain. Again, the open pores suck up the stain like a kid at a soda fountain. But that's only part of the explanation; after all, end grain sucks up clear finishes just as deep as stains. What makes the stain different is that it isn't clear. And the deeper the stain gets pulled into the wood, the darker the color at the surface will be. The result is ends that are noticeably darker than the face of a piece.

Getting the end grain to match the rest of the project is a matter of stopping the stain from penetrating so deep. That way, the end grain and face grain end up with roughly the same amount of stain. Fortunately, there are a number of ways to do this.

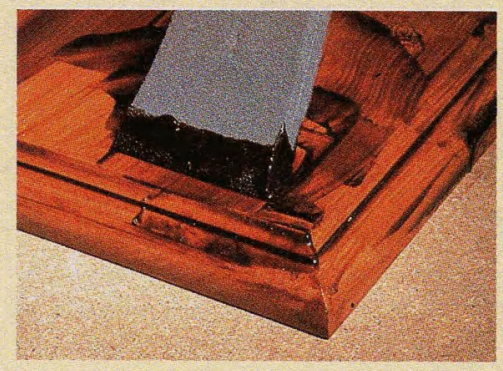

▲ *A gel stain is just a thick stain. Its thickness limits the amount it penetrates, so I usually work it into the pores with a brush.*

▲ *After it's wiped off, you can see that the limited penetration of a gel stain means the end grain is the same color as the face grain.*

GEL STAINS

When you're staining a project with a lot of exposed end grain, the easiest way to get a consistent color is to use a gel stain. A gel stain is like any other stain — it's just a little thicker. So instead of spilling over the surface of a workpiece, a gel stain will just sit there, like a glob of pudding.

LIMITED PENETRATION. Because a gel stain is thick, it won't penetrate very deep into the wood, whether it's face grain or end grain, see photos at left. The result is that the end grain and the face grain end up with an even, consistent color.

You might think that gel stains are all alike; a magical formula that some finishing expert concocted. But while all gel stains are definitely thicker than regular liquid stains, they're not all the same. When it comes to end grain, the biggest difference is their

thickness. I've used some stains that were the consistency of thick cream. Others were like a thick paste.

Remember, what you want is a stain that's not going to seep into the end grain. So when choosing a gel stain, just keep in mind that a thick stain will tend to penetrate less and give you a more even color.

DRAWBACKS. Of course, gel stains aren't the answer in every situation. There are times when I *want* the stain to penetrate as deep as possible. When I have a piece of figured wood, like bird's eye maple, I'm not going to use a gel stain because I want to highlight the figure of the wood. The gel stain isn't necessarily going to "hide" the grain. But it will even out the color more than I want it to.

The other time I don't use a gel stain is when I can't find the exact color I want. Here, I usually end up choosing a traditional (liquid) oil or water-base stain, so I take a different tack to handle the end grain.

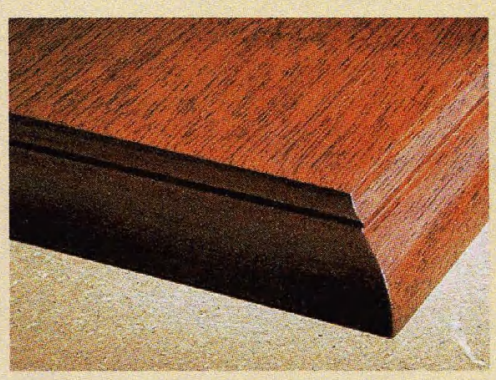

▲ *When staining end grain, a regular stain will soak deep into the pores of the wood, darkening the ends much more than the face.*

▲ *One solution to evening out the end grain is to sand it finer than the rest of the board. Here, I sanded the end grain to 600-grit.*

LIQUID STAINS

When I work with a traditional liquid stain, I usually get a more even color if I do a little extra sanding on the end grain — to 600 grit instead of 220, see photos above. The reason this works is because you're burnishing the end grain. The pore openings are being polished so they're smaller and don't soak in as much stain.

CURVED SURFACES. With the coffee table on page 20, the stain with the color I liked happened to be a traditional oil-base stain. The problem was the table was curved. In fact, this table threw me more than one curve.

For one thing, the cabriole legs have end grain at the top of the knees and the feet. But there's no "hard" corner where the end grain starts and the edge grain stops. So instead of sanding finer, I'd recommend using wood conditioner, see below.

But the oval top was a different matter. Wood conditioner applied to this narrow edge would seep into the face grain. I didn't want light streaks around the edge of the table, so I went back to the sanding solution and sanded the whole edge to 600-grit.

TOP COATS

When it's time to apply a top coat, end grain isn't nearly as much of a problem. The finish penetrates just as deep, and in fact, you may notice that the end grain gets slightly darker. That's because oil and varnish tend to add an amber tint to the wood anyway. But I've never thought this was very noticeable, so I haven't gone to the trouble of sanding it any finer.

About the only thing you will notice about putting a clear finish on end grain is that it dries out a lot quicker. So I sometimes end up applying an extra coat of finish.

One final note: I've talked to woodworkers who sand *all* end grain to 600 grit, even if they're just applying a clear finish with no stain. They do this because the end grain looks and feels so much better after it's been sanded so fine. But I think this is a lot of unnecessary work. After you build up a film of finish on the wood, you won't be able to tell a difference. W

WOOD CONDITIONER

What can be a little confusing about end grain is that it isn't just limited to the ends of a board. It can show up on the face of some boards, too.

This is especially true of woods like pine, cherry, and maple that tend to have wild, wavy grain. When the grain turns up toward the face of a board, you end up with a small patch of end grain.

When staining, these areas of end grain can end up as dark blotches, see the left half of the board above. But you can avoid this.

One solution I often use is to apply a wood conditioner (or wash coat) before staining. This is usually just a solvent that evaporates slowly (although it can also be a very thin finish). Because the conditioner is applied underneath the stain, it limits and evens out the stain's penetration, see the right half of the board above.

When staining the cabriole legs, one way to ensure an even color is to brush a heavy coat of wood conditioner on the entire leg. After letting it set a few minutes, wipe off any excess and apply the stain.

PLATE SHELF

The base of this oak plate shelf features a couple different architectural-style moldings. And on top, there's a simple galley rail with spindles.

This oak plate shelf doesn't require difficult joinery. Instead, it features a couple different types of architectural-style moldings that are mitered together, refer to drawing below left.

For starters, there's a layer of dentil molding. While this molding is "buried" in the middle, it's the key to building the base of the shelf. But more on this later.

Just above the dentil molding, there's also a layer of thick crown molding. This molding isn't difficult to make either. It's built up in layers, so to create the profile, all you need are a couple of common router bits.

DENTIL MOLDING. The base of the shelf is built around the dentil molding, so I made it first, see Fig. 1. But I didn't worry about cutting it to an exact dimension. That's because it's more important to end up with a full dentil block at each corner, see Fig. 1a. (Later, I sized the other base pieces to this piece of molding.)

All the **dentil molding (A)** starts out as a single ½"-thick blank, see Fig. 1. Then to cut the dentil blocks, I used a simple shop-made jig, see page 18. Once the dentil blocks are cut, the blank can be mitered to create a three-sided frame.

BASE BOTTOM. The dentil molding will be glued together at the same time it's glued to the bottom. So I cut the ¾"-thick **bottom (B)** to size so the dentil overhangs it ¼" at the front and sides, see drawing below left.

To cradle the molding, I cut a rabbet around all four sides of the bottom, see Fig. 1b. The rabbet is sized so the molding pieces fit together and are flush at the back edge.

Now, before gluing the molding to the bottom, I routed a ½" roundover

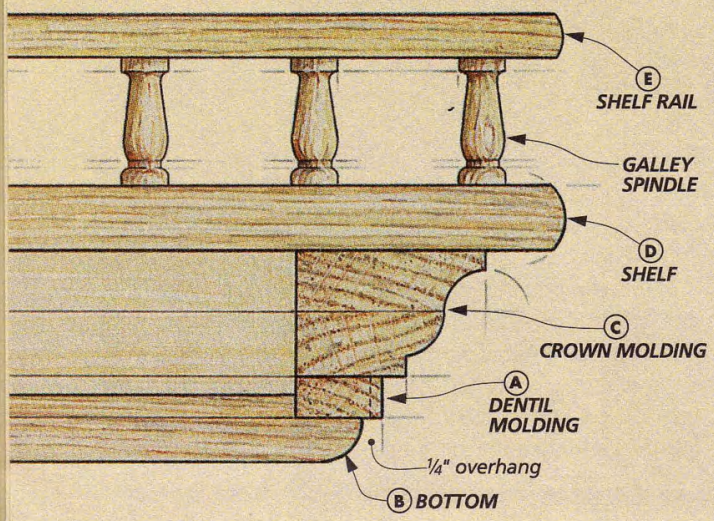

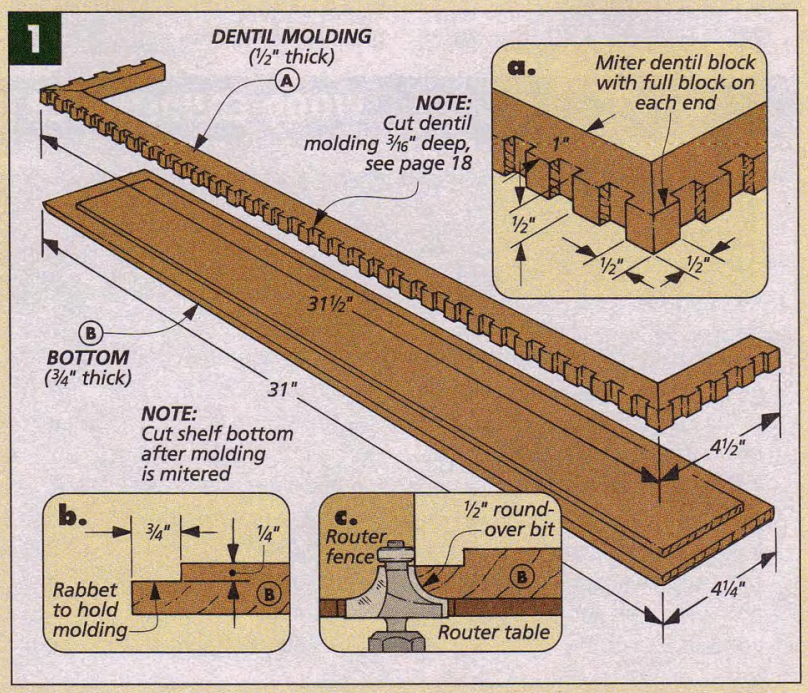

on the front and ends, see Fig. 1c.

CROWN MOLDING. The next piece to add is the **crown molding (C)**, see Fig. 2. Actually, this molding is two ¾"-thick pieces glued together.

Note: The idea here is to make these pieces look like one thick blank, so you'll want to choose your stock carefully, refer to page 19.

But before you laminate the pieces, first rout a profile on each, see Fig. 2a. On the top piece, I routed a ½" cove, leaving a ¼" shoulder on the top. The bottom piece gets a ½" roundover with a ¼" shoulder on the bottom.

Next, glue the two pieces of molding together. And when the glue is dry, miter the blank so the bottom shoulder extends ¼" beyond the dentil molding, see Fig. 2b.

SHELF. With the base complete you can concentrate on the shelf. The **shelf (D)** is a ¾"-thick blank cut to finished size of 6¼" x 36", see Fig. 3.

Then to hold the plates, I routed two ¼"-deep grooves in the shelf, see Fig. 3a. Plus, I added a thumbnail profile to the front and side edges with a ½" round-over bit, see Fig. 3b.

SHELF RAIL. Next, I added a **shelf rail (E)**, see Fig. 4. After cutting it to size from ½"-thick stock, I routed another thumbnail profile on all its edges. But this time, I used a ⅜" round-over bit, see Fig. 4a.

To join the rail to the shelf, I purchased 1½"-long galley spindles (2" overall), see Figs. 4 and 4b. Simply drill ⅜"-dia. holes 5/16" deep for the tenons. These holes start 1" from each end and are spaced 2" apart.

After gluing the rail and spindles in place, I drilled countersunk pilot holes in the shelf (two on each end and one in the middle), see Figs. 5 and 5a. You'll need these for screwing the top shelf to the base. (Gluing the shelf wouldn't allow the wood to expand.) Later, these holes can be plugged, trimmed, and sanded flush.

HANGING CLEAT. Finally, to hang the shelf, I used a **hanging cleat (F)**. It's just a ½"-thick blank ripped in two with the blade set at 45°, see Fig. 6. Screw the wider piece to the wall and glue the other inside the shelf. W

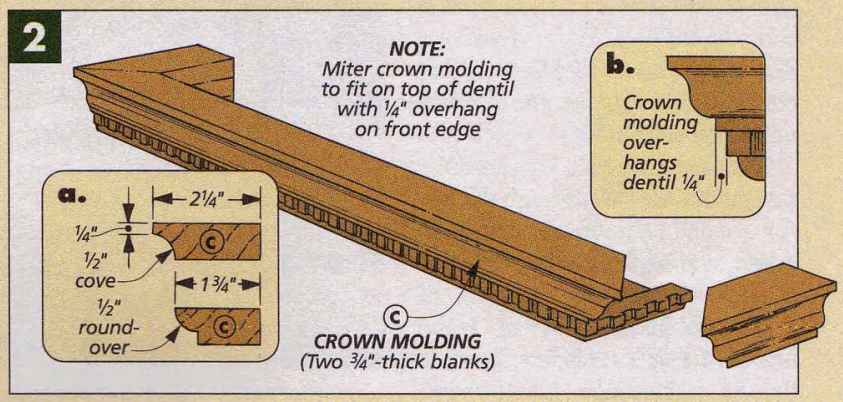

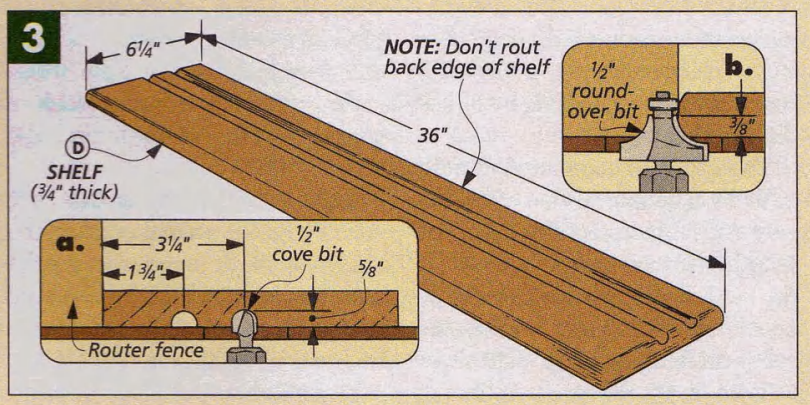

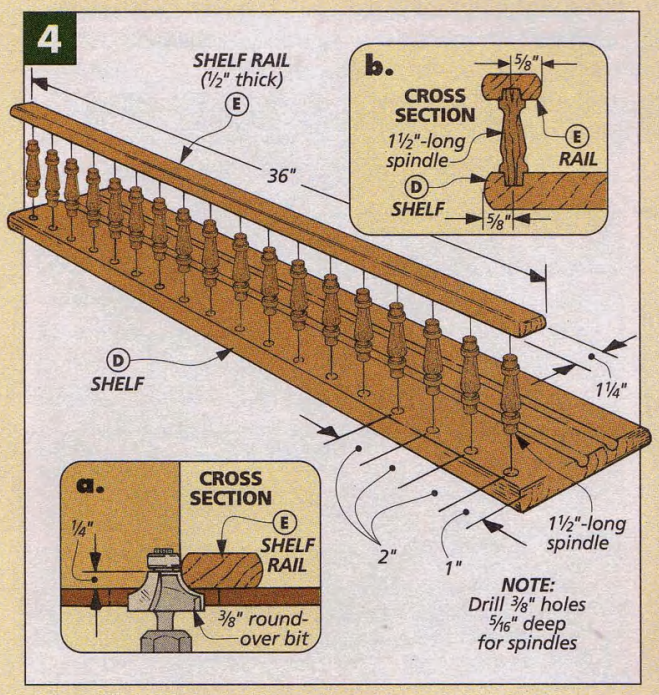

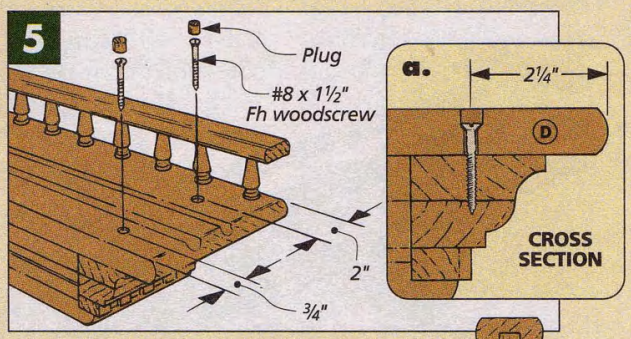

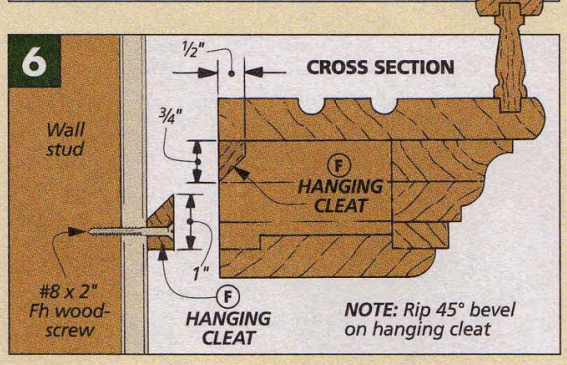

SLIDING MITER JIG

Using a circular saw to make an accurate square or mitered crosscut can be a real challenge. But recently, **William Hale**, of DeSoto, Illinois, sent us an idea for a jig that converts a circular saw into a sliding miter saw, see photo.

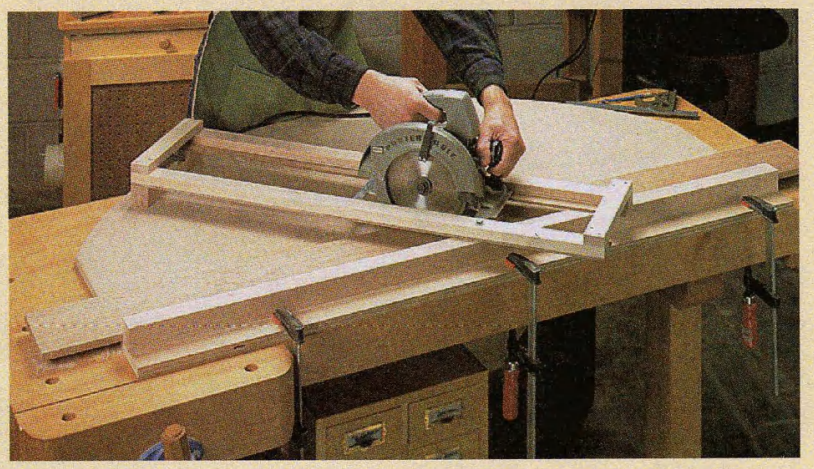

The jig consists of a long carriage that guides the saw through the cut. A fence and plywood table allow the carriage to be adjusted to different angles for miter cuts.

CARRIAGE. Since the carriage is the heart of the jig, it's built first. To guide the saw, make a pair of rails from two ¾"-thick pieces of maple. Then to support the saw in the carriage, glue 2½"-wide pieces of ¼"-thick hardboard to the bottom of each rail, see the drawing below.

The rails are connected at both ends by a couple of spacer blocks screwed to the top of the rails. The length of these blocks depends on the width of your saw base. I cut mine so the saw slides easily between the rails with minimal side-to-side play.

Then on one end of the bottom of the rails, add a 1⅝"-thick support block. It lifts the carriage so you can slide a workpiece underneath. (I also cut a notch in the support block so you can lock the carriage at any angle with a clamp.)

FENCE & TABLE. With the carriage built, you're ready to make the fence. The fence is made from two pieces of ¾"-thick stock glued together. To keep the carriage level, it's cut to the same height (1⅝") as the support block.

The table is a ¾"-thick piece of plywood with an arc cut on one edge, see detail 'a'. Simply glue and screw the fence to the table.

PIVOT. A bolt attaches the carriage to the fence and allows it to pivot to any angle. To determine the pivot point, position the carriage so the saw blade is centered on the table and fence. Then, drill a ¼"-dia. hole through one of the carriage rails and the fence. A hex-head bolt, washers, and a nut can be used to hold the carriage in place while using the jig. W

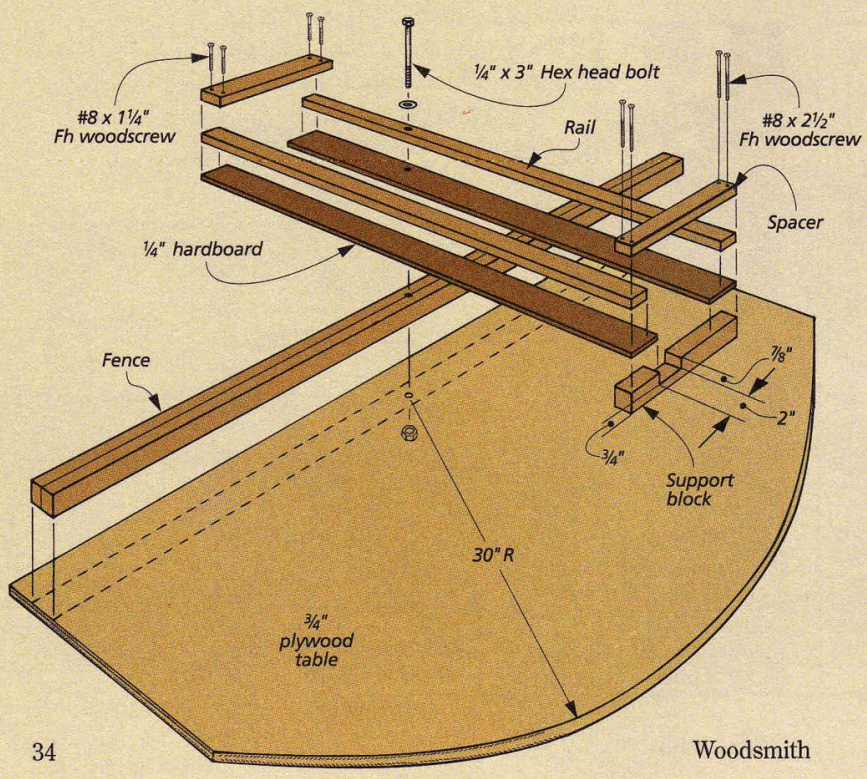

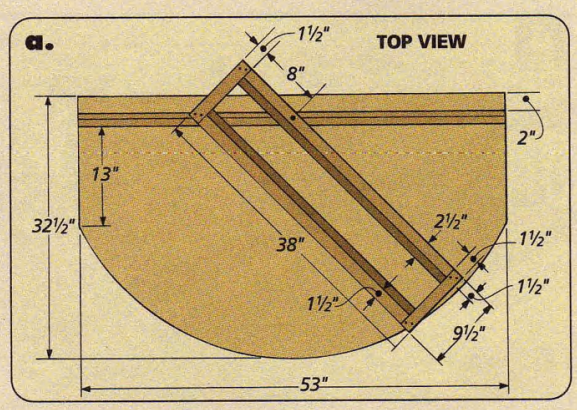

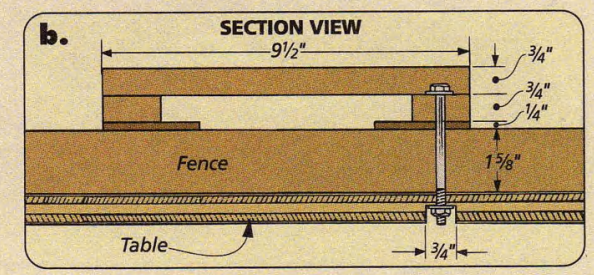

SOURCES

Woodsmith Project Supplies offers hardware kits and supplies for some of the projects shown in this issue. Supplies for these projects are also available at your local hardware store or through the mail order sources at right.

JEWELRY CABINET

A complete hardware kit for the jewelry cabinet on page 6 is currently available from *Woodsmith Project Supplies*. The kit includes all the screws you'll need, plus the following:

- (2 pair) 2" x 1⅜" Brass Ball-tipped Hinges
- (9) ½" x ½" Brass Knobs with Studs
- (4) 5/16"-dia. Magnetic Catches with Strikes
- (2) 1½"-tall Drop Pulls with 1"-dia. Backs
- (8) 1⅛"-long Brass Necklace Pegs
- (6) Table Top Fasteners
- (4) 3/16"-dia. O-rings

70106-100 Jewelry Cabinet Hardware $45.95

A set of full-size patterns of the cabriole legs, rails, and stretchers for the cabinet are included in the kit listed above. But if you wish, you can purchase the patterns separately.

8005-223 Jewelry Cabinet Patterns $3.50

CABRIOLE LEGS

We kept our cabriole legs as simple as possible. But there are a few things you will need to make them.

TURNING BLANKS. We cut our cabriole legs from turning blanks. These 3" x 3" blanks often come rough, so you may have to square them up before you can begin, see the mail order sources listed at right.

TOOLS. There isn't much shaping to do on these legs, but what little shaping there is will go easier with a good cabinet or patternmaker's rasp and a half-round wood file, see sources at right.

PRE-MADE LEGS. You can build both of the cabriole leg projects in this issue without having to build the legs. We designed the projects so you can buy pre-made legs, see the sources listed at right.

COFFEE TABLE

To build the coffee table, the only hardware you'll need are some Z-shaped table top fasteners, available from the sources listed at right.

However, we used a special profile bit to rout the edge. It's made by Freud and is called a "Table Top Classical Bold Bit," and the Freud product number is 99-011, see the mail order sources at right.

Like the Jewelry Cabinet, there is also a set a full-size patterns available for the coffee table. These patterns include the cabriole legs, the rails and stretchers, and a quarter pattern for the top.

8005-224 Coffee Table Patterns $3.50

BIRD FEEDER

This bird feeder, shown on page 24, requires quite a bit of hardware that you don't use often on a woodworking project. *Woodsmith Project Supplies* is currently offering a kit for the feeder. The kit does not include the pipe or flanges, but it does include all the woodscrews, plus the following:

- (1 bag) Square Cedar Shingles
- (1 bag) Fish Scale Cedar Shingles
- (4) 12" x 19" Smooth Copper Sheets
- (42) #16 x 1" Brass Escutcheon pins
- (24) #17 x ⅜" Copper Tacks
- (1) ¼"-dia. x 1¾" Quick Release Pin
- (1) 1⅛" I.D. Washer
- (2) ⅛" x 6" - 12" Plexiglas

70106-200 Bird Feeder Hardware Kit ... $49.95 ea.

Note: The cedar shingles and copper sheets needed for this project are also available through the sources at right. We found the rest of the hardware at a local hardware store.

PLATE SHELF

To build the plate shelf on page 32, the only "hardware" you'll need are some spindles for the rail on top. (Our spindles were 1½"-tall, plus tenons.) These or similar spindles are readily available, see sources at right.

MAIL ORDER SOURCES

Similar project supplies and hardware may be ordered from the following companies:

Adams Wood Products
615-587-2942
Cabriole legs, Turning blanks

Cherry Tree Toys
800-848-4363
Bird feeder hardware, Spindles

Woodcraft
800-225-1153
Rasps & files, Cabriole legs, Table top fasteners, Spindles

Woodsmith Store
800-835-5084
Jewelry cabinet hardware, Rasps & files, Table top fasteners, Bird feeder hardware, Spindles

Woodworkers' Store
800-279-4441
Jewelry cabinet hardware, Rasps & files, Table top fasteners, Turning blanks, Spindles

Woodworker's Supply
800-645-9292
Rasps & files, Cabriole legs, Freud router bit, Table top fasteners, spindles

WOODSMITH PROJECT SUPPLIES

To order a hardware kit from *Woodsmith Project Supplies* or for a copy of our *WoodsmithShop* catalog, use our Toll Free order line. It's open Monday through Friday, from 7 AM to 7 PM Central Time.

Before calling, please have your VISA, MasterCard, or Discover Card ready.

If you would like to mail your order in, call the number below for more information concerning shipping charges as well as any applicable sales tax.

1-800-444-7527

Note: Prices subject to change after October 1996

WoodNet™ **COMPUTER BULLETIN BOARD FOR WOODWORKERS**

- More than 50 Project Plans to Download
- Step-by-Step "How-to" Articles
- Woodworking & Finishing Forums
- Back Issue Indexes for *Woodsmith* & *ShopNotes*
- For PC or Mac
- Download FREE Plans on First Call
- Join Hundreds of Members

To log on to WoodNet, set your communication program to 8 data bits, 1 stop bit, no parity, full duplex, and ANSI terminal emulation. Then call 1-515-245-9663. Questions? Call us at: 515-282-7000 x2173, M-F 9-5.

FINAL DETAILS

▲ **Coffee Table.** *The elegant and formal design of this coffee table features an oval top, graceful cabriole legs, and scalloped aprons. Step-by-step instructions start on page 20.*

◄ **Jewelry Cabinet.** *The L-shaped doors on this cabinet open to reveal nine small drawers. Plus, there's room to hang necklaces. See page 6 for instructions.*

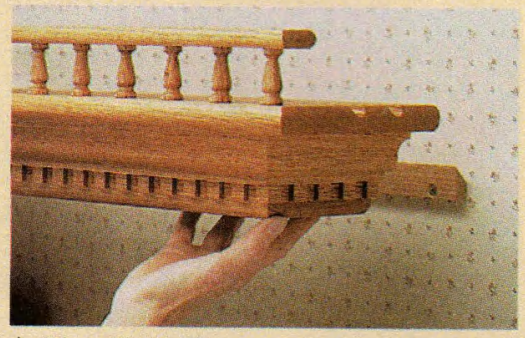

▲ **Plate Shelf.** *This easy-to-build shelf is supported by a hidden two-piece mounting system. For more on how to build this project, see page 32.*

◄ **Bird Feeder.** *It's the details that make this project unique: cedar shingles, a copper roof, and a quick-release pin that allows the feeder to drop down for easy filling. Step-by-step plans begin on page 24.*